US009471269B2

(12) **United States Patent**
Dunn et al.

(10) **Patent No.: US 9,471,269 B2**
(45) **Date of Patent: *Oct. 18, 2016**

(54) **PORTABLE PRESENTATION SYSTEM AND METHODS FOR USE THEREWITH**

(71) Applicant: **Steelcase Inc.**, Grand Rapids, MI (US)

(72) Inventors: **Michael H Dunn**, Dunwoody, GA (US); **Ian G Hutchinson**, Atlanta, GA (US); **Peter W Hildebrandt**, Duluth, GA (US)

(73) Assignee: **STEELCASE INC.**, Grand Rapids, MI (US)

(*) Notice: Subject to any disclaimer, the term of this patent is extended or adjusted under 35 U.S.C. 154(b) by 146 days.

This patent is subject to a terminal disclaimer.

(21) Appl. No.: **13/968,931**

(22) Filed: **Aug. 16, 2013**

(65) **Prior Publication Data**

US 2014/0006976 A1 Jan. 2, 2014

Related U.S. Application Data

(63) Continuation of application No. 13/087,085, filed on Apr. 14, 2011, now Pat. No. 8,610,641, which is a continuation of application No. 11/585,752, filed on Oct. 24, 2006, now Pat. No. 7,948,448, which is a

(Continued)

(51) **Int. Cl.**
G06F 3/14 (2006.01)
G09B 5/06 (2006.01)
(Continued)

(52) **U.S. Cl.**
CPC ***G06F 3/1454*** (2013.01); ***G06F 3/0481*** (2013.01); ***G06F 3/0482*** (2013.01);

(Continued)

(58) **Field of Classification Search**
CPC .. G06F 3/0412; G06F 3/1423; G06F 3/1431; G06F 3/1438; G06F 3/1454; G06F 3/0481; G06F 3/04845; G06F 3/04817; G06F 3/0482; G06F 3/0486; G09B 5/067; G09B 5/08; G09G 3/002; G09G 2370/04; H04L 12/1813; H04N 7/15; H04N 9/3102; H04N 9/3147; H04N 9/3197
See application file for complete search history.

(56) **References Cited**

U.S. PATENT DOCUMENTS

3,911,218 A 10/1975 Suzuki et al.
4,430,526 A 2/1984 Brown et al.
(Continued)

FOREIGN PATENT DOCUMENTS

EP 0279558 A1 8/1998
JP 61288655 A 12/1986
(Continued)

OTHER PUBLICATIONS

Wilkhahn + Hahne GmbH + Co., InterWall. ConsulTable. ConAction range, 12 page brochure, no date.
(Continued)

Primary Examiner — Tom Sheng
(74) *Attorney, Agent, or Firm* — Quarles & Brady LLP

(57) **ABSTRACT**

An assembly for sharing information in a conference space comprising a contiguous large presentation display assembly including a large contiguous presentation surface, a processor programmed to perform the steps of dividing the large surface into a plurality of adjacent presentation sub-spaces including at least one master sub-space and a plurality of slave sub-spaces and enabling an interface that allows images to be presented via the sub-spaces and that enables moving images among the different sub-spaces, wherein, upon an image being moved from the master sub-space to one of the slave sub-spaces, the master presentation sub-space is left blank to receive another image.

20 Claims, 73 Drawing Sheets

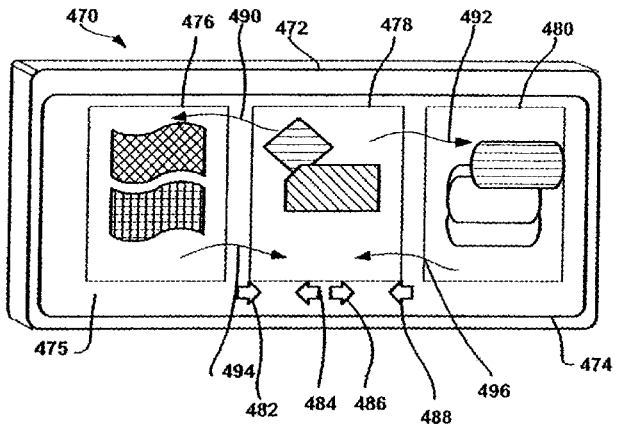

Related U.S. Application Data

continuation-in-part of application No. 11/446,019, filed on Jun. 2, 2006, now abandoned, which is a continuation-in-part of application No. 11/096,969, filed on Apr. 1, 2005, now abandoned, which is a continuation-in-part of application No. 10/816,537, filed on Apr. 1, 2004, now Pat. No. 7,834,819.

(60) Provisional application No. 60/687,389, filed on Jun. 2, 2005, provisional application No. 60/771,908, filed on Feb. 9, 2006.

(51) **Int. Cl.**

G09B 5/08	(2006.01)
G09G 3/00	(2006.01)
H04N 7/15	(2006.01)
H04N 9/31	(2006.01)
G06F 3/0481	(2013.01)
G06F 3/0484	(2013.01)
G06F 3/0482	(2013.01)
G06F 3/0486	(2013.01)
H04L 12/18	(2006.01)

(52) **U.S. Cl.**

CPC ***G06F3/0486*** (2013.01); ***G06F 3/04817*** (2013.01); ***G06F 3/04845*** (2013.01); ***G09B 5/067*** (2013.01); ***G09B 5/08*** (2013.01); ***G09G 3/002*** (2013.01); ***H04N 7/15*** (2013.01); ***H04N 9/3102*** (2013.01); ***H04N 9/3147*** (2013.01); ***H04N 9/3197*** (2013.01); *G09G 2370/04* (2013.01); *H04L 12/1813* (2013.01)

(56) **References Cited**

U.S. PATENT DOCUMENTS

4,451,895	A	5/1984	Sliwkowski	
4,495,490	A	1/1985	Hopper et al.	
4,503,429	A	3/1985	Schreiber	
4,521,770	A	6/1985	Rhyne	
4,538,993	A	9/1985	Krumholz	
4,587,568	A	5/1986	Takayama et al.	
4,616,336	A	10/1986	Robertson et al.	
4,659,876	A	4/1987	Sullivan et al.	
4,667,254	A	5/1987	Araki et al.	
4,683,468	A	7/1987	Himelstein et al.	
4,686,522	A	8/1987	Hernandez et al.	
4,715,818	A	12/1987	Shapiro et al.	
4,725,829	A	2/1988	Murphy	
4,736,407	A	4/1988	Dumas	
4,752,773	A	6/1988	Togawa et al.	
4,752,893	A	6/1988	Guttag et al.	
4,763,356	A	8/1988	Day, Jr. et al.	
4,780,821	A	10/1988	Crossley	
4,797,106	A	1/1989	Umehara et al.	
4,815,029	A	3/1989	Barker et al.	
4,893,116	A	1/1990	Henderson et al.	
4,897,801	A	1/1990	Kazama et al.	
4,939,509	A	7/1990	Bartholomew et al.	
4,953,159	A	8/1990	Hayden et al.	
4,954,970	A	9/1990	Walker et al.	
5,002,491	A	3/1991	Abrahamson et al.	
5,008,853	A	4/1991	Bly et al.	
5,014,267	A	5/1991	Tompkins et al.	
5,018,083	A	5/1991	Watanabe et al.	
5,025,314	A	6/1991	Tang et al.	
5,027,198	A	6/1991	Yoshioka	
5,038,158	A	8/1991	Ayers et al.	
5,050,105	A	9/1991	Peters	
5,063,600	A	11/1991	Norwood	
5,073,926	A	12/1991	Suzuki et al.	
5,101,197	A	3/1992	Hix et al.	
5,107,443	A	4/1992	Smith et al.	
5,119,319	A	6/1992	Tanenbaum	
5,146,552	A	9/1992	Cassorla et al.	
5,176,520	A	1/1993	Hamilton	
5,201,011	A	4/1993	Bloomberg et al.	
5,202,828	A	4/1993	Vertelney et al.	
5,206,934	A	4/1993	Naef, III	
5,208,912	A	5/1993	Nakayama et al.	
5,216,755	A	6/1993	Walker et al.	
5,239,466	A	8/1993	Morgan et al.	
5,271,097	A	12/1993	Barker et al.	
5,280,583	A	1/1994	Nakayama et al.	
5,293,619	A	3/1994	Dean	
5,299,033	A	3/1994	Watanabe et al.	
5,299,307	A	3/1994	Young	
5,309,555	A	5/1994	Akins et al.	
5,339,389	A	8/1994	Bates et al.	
5,347,295	A	9/1994	Agulnick et al.	
5,375,200	A	12/1994	Dugan et al.	
5,392,400	A	2/1995	Berkowitz et al.	
5,412,775	A	5/1995	Maeda et al.	
5,442,749	A	8/1995	Northcutt et al.	
5,448,263	A	9/1995	Martin	
5,463,728	A	10/1995	Blahut et al.	
5,465,370	A	11/1995	Ito et al.	
5,473,737	A	12/1995	Harper	
5,502,727	A	3/1996	Catanzaro et al.	
5,530,795	A	6/1996	Wan	
5,530,880	A	6/1996	Katsurabayashi	
5,537,548	A	7/1996	Fin et al.	
5,548,705	A	8/1996	Moran et al.	
5,579,481	A	11/1996	Drerup	
5,596,721	A	1/1997	Masse et al.	
5,608,426	A	3/1997	Hester	
5,608,872	A	3/1997	Schwartz et al.	
5,625,833	A	4/1997	Levine et al.	
5,634,018	A	5/1997	Tanikoshi et al.	
5,649,104	A	7/1997	Carleton et al.	
5,651,107	A	7/1997	Frank et al.	
5,657,049	A	8/1997	Ludolph et al.	
5,671,380	A	9/1997	Hidaka	
5,680,636	A	10/1997	Levine et al.	
5,704,042	A	12/1997	Hester et al.	
5,717,856	A	2/1998	Carleton et al.	
5,717,939	A	2/1998	Bricklin et al.	
5,748,894	A	5/1998	Ishizaki et al.	
5,754,186	A	5/1998	Tam et al.	
5,761,419	A	6/1998	Schwartz et al.	
5,781,727	A	7/1998	Carleton et al.	
5,790,114	A	8/1998	Geaghan et al.	
5,790,818	A	8/1998	Martin	
5,799,320	A	8/1998	Klug	
5,805,118	A	9/1998	Mishra et al.	
5,819,038	A	10/1998	Carleton et al.	
5,822,525	A	10/1998	Tafoya et al.	
5,831,622	A	11/1998	Ayala	
5,835,713	A	11/1998	FitzPatrick et al.	
5,838,914	A	11/1998	Carleton et al.	
5,870,547	A	2/1999	Pommier et al.	
5,872,923	A	2/1999	Schwartz et al.	
5,889,946	A	3/1999	FitzPatrick et al.	
5,892,509	A	4/1999	Jakobs et al.	
5,903,252	A	5/1999	Ogata	
5,920,694	A	7/1999	Carleton et al.	
5,923,844	A	7/1999	Pommier et al.	
5,938,724	A	8/1999	Pommier et al.	
5,940,082	A	8/1999	Brinegar et al.	
5,944,785	A	8/1999	Pommier et al.	
5,948,022	A	9/1999	Carleton et al.	
5,949,432	A	9/1999	Gough et al.	
5,987,376	A	11/1999	Olson et al.	
5,995,096	A	11/1999	Kitahara et al.	
6,008,804	A	12/1999	Pommier et al.	
6,020,863	A	2/2000	Taylor	
6,046,709	A *	4/2000	Shelton et al.	345/1.1
6,047,314	A	4/2000	Pommier et al.	
6,061,717	A	5/2000	Carleton et al.	
6,084,638	A	7/2000	Hare et al.	
6,091,408	A	7/2000	Treibitz et al.	
6,115,022	A	9/2000	Mayer, III et al.	

(56) **References Cited**

U.S. PATENT DOCUMENTS

6,219,099	B1	4/2001	Johnson et al.	
6,223,212	B1	4/2001	Batty et al.	
6,237,025	B1	5/2001	Ludwig et al.	
6,262,724	B1	7/2001	Crow et al.	
6,266,691	B1	7/2001	Watanabe et al.	
6,275,223	B1	8/2001	Hughes	
6,335,739	B1	1/2002	Matsukura et al.	
6,340,976	B1	1/2002	Oguchi et al.	
6,342,906	B1	1/2002	Kumar et al.	
6,388,654	B1	5/2002	Platzker et al.	
6,411,988	B1	6/2002	Tafoya et al.	
6,473,704	B1	10/2002	Ito et al.	
6,560,637	B1	5/2003	Dunlap et al.	
6,567,813	B1	5/2003	Zhu et al.	
6,587,587	B2	7/2003	Altman et al.	
6,594,390	B2	7/2003	Frink et al.	
6,601,087	B1	7/2003	Zhu et al.	
6,608,636	B1	8/2003	Roseman	
6,614,451	B1	9/2003	Hudson et al.	
6,654,032	B1	11/2003	Zhu et al.	
6,662,210	B1	12/2003	Carleton et al.	
6,693,661	B1	2/2004	Vanderwilt et al.	
6,714,172	B2	3/2004	Matsuzaki et al.	
6,724,373	B1	4/2004	O'Neill, Jr. et al.	
6,735,616	B1	5/2004	Thompson et al.	
6,759,997	B2	7/2004	Someya et al.	
6,783,252	B1	8/2004	Cambron	
6,788,319	B2	9/2004	Matsumoto et al.	
6,836,870	B2	12/2004	Abrams	
6,901,448	B2	5/2005	Zhu et al.	
6,925,645	B2	8/2005	Zhu et al.	
6,989,801	B2	1/2006	Bruning	
7,006,055	B2	2/2006	Sukthankar et al.	
7,016,935	B2	3/2006	Lee et al.	
7,018,043	B2	3/2006	Castaldi et al.	
7,027,035	B2	4/2006	Youden	
7,046,213	B2	5/2006	Campbell et al.	
7,069,298	B2	6/2006	Zhu et al.	
7,130,883	B2	10/2006	Zhu et al.	
7,134,079	B2	11/2006	Brown et al.	
7,143,134	B2	11/2006	Petrie et al.	
7,170,531	B2	1/2007	Itoh et al.	
7,180,475	B2 *	2/2007	Slobodin et al.	345/2.3
7,188,317	B1	3/2007	Hazel	
7,203,755	B2	4/2007	Zhu et al.	
7,238,231	B1	7/2007	Craig et al.	
7,248,231	B2	7/2007	Hurley et al.	
7,373,605	B2	5/2008	Schaper	
7,451,181	B2	11/2008	Sasaki et al.	
7,454,708	B2	11/2008	O'Neal et al.	
7,486,254	B2	2/2009	Suzuki et al.	
7,532,196	B2	5/2009	Hinckley	
7,542,052	B2	6/2009	Solomon et al.	
7,716,600	B2	5/2010	Sawano	
7,834,819	B2	11/2010	Dunn et al.	
7,856,473	B2	12/2010	Horikiri et al.	
7,948,448	B2 *	5/2011	Hutchinson et al.	345/1.1
8,103,968	B2	1/2012	Cheng	
8,495,520	B2	7/2013	Islam et al.	
8,610,641	B2 *	12/2013	Hutchinson et al.	345/1.1
2002/0067318	A1 *	6/2002	Matsuzaki et al.	345/1.1
2002/0140675	A1	10/2002	Ali et al.	
2003/0122863	A1	7/2003	Dieberger et al.	
2003/0197659	A1	10/2003	Arai	
2004/0002049	A1 *	1/2004	Beavers et al.	434/350
2004/0125044	A1	7/2004	Suzuki	
2004/0252074	A1 *	12/2004	Schaper	345/1.1
2005/0091610	A1	4/2005	Frei et al.	
2005/0193060	A1	9/2005	Barton	
2005/0195221	A1	9/2005	Berger et al.	
2005/0198141	A1	9/2005	Zhu et al.	
2005/0219223	A1 *	10/2005	Kotzin et al.	345/173
2005/0235215	A1	10/2005	Dunn et al.	
2006/0010392	A1	1/2006	Noel et al.	
2006/0048058	A1 *	3/2006	O'Neal et al.	715/730
2007/0044028	A1	2/2007	Dunn et al.	
2007/0065096	A1	3/2007	Ando et al.	
2008/0148152	A1	6/2008	Blinnikka et al.	
2009/0063542	A1	3/2009	Bull et al.	
2009/0153434	A1	6/2009	Cheng et al.	
2009/0327893	A1	12/2009	Terry et al.	
2010/0192072	A1	7/2010	Spataro et al.	
2010/0293598	A1	11/2010	Collart et al.	
2011/0047459	A1	2/2011	Van Der Westhuizen	
2011/0050975	A1	3/2011	Chung	
2011/0175830	A1	7/2011	Miyazawa et al.	
2011/0181603	A1	7/2011	Liang et al.	
2011/0279350	A1 *	11/2011	Hutchinson et al.	345/1.1
2011/0310034	A1	12/2011	Ouchi et al.	
2012/0110509	A1	5/2012	Isozu et al.	
2012/0117290	A1 *	5/2012	Sirpal et al.	710/303
2013/0024821	A1	1/2013	Lee	
2013/0185665	A1	7/2013	Furukawa et al.	
2013/0321340	A1	12/2013	Seo et al.	
2013/0339880	A1	12/2013	Hutchinson et al.	
2014/0006976	A1	1/2014	Hutchinson et al.	
2014/0068483	A1	3/2014	Platzer et al.	
2014/0359435	A1	12/2014	Zheng et al.	
2015/0227166	A1	8/2015	Lee et al.	

FOREIGN PATENT DOCUMENTS

JP	62179268	A	8/1987
JP	2001217977	A	8/2001
JP	2002049453	A	2/2002
JP	2003031079	A	1/2003
WO	WO0131397	A1	5/2001
WO	WO2005099263	A1	10/2005
WO	2006130750	A1	12/2006

OTHER PUBLICATIONS

PCT International Search Report and Written Opinion, Application No. PCT/US2005/011366, Aug. 4, 2005.

PCT International Preliminary Report on Patentability, Application No. PCT/US2005/011366, Oct. 12, 2006.

PCT International Search Report and Written Opinion, Application No. PCT/US2007/082202, Jun. 5, 2008.

PCT International Search Report, Application No. PCT/US2006/021233, Oct. 6, 2006.

PCT International Preliminary Report on Patentability, Application No. PCT/US2006/021233, Dec. 6, 2007.

PCT International Search Report, Application No. PCT/US2007/012671, Jan. 3, 2008.

PCT International Preliminary Report on Patentability, Application No. PCT/US2007/0012671, Dec. 3, 2008.

* cited by examiner

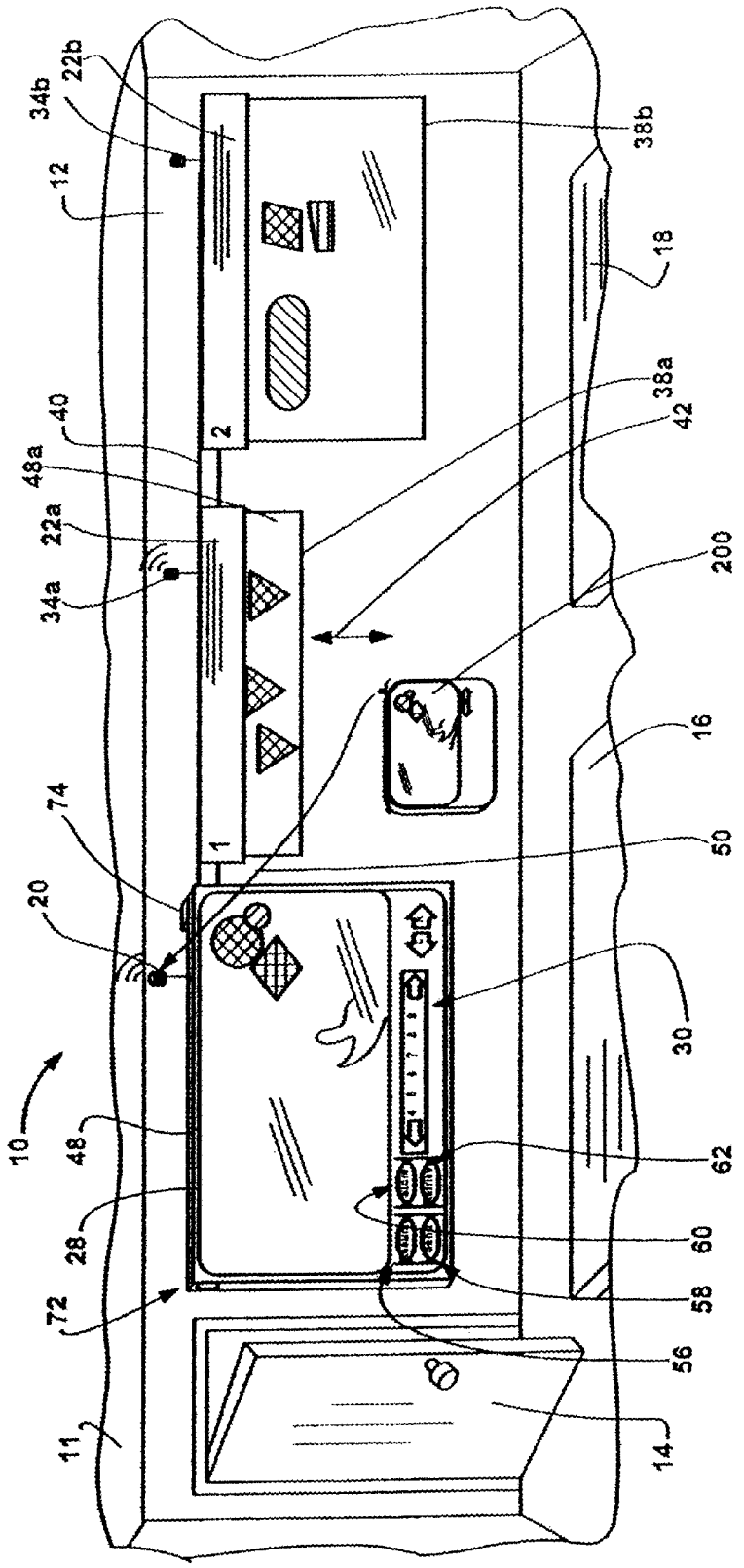
34b
22b
12
38b
18
40
48a
22a
34a
38a
42
200
16
74
50
20
30
10
48
62
28
60
72
58
56
11
14
1
2

Fig. 1

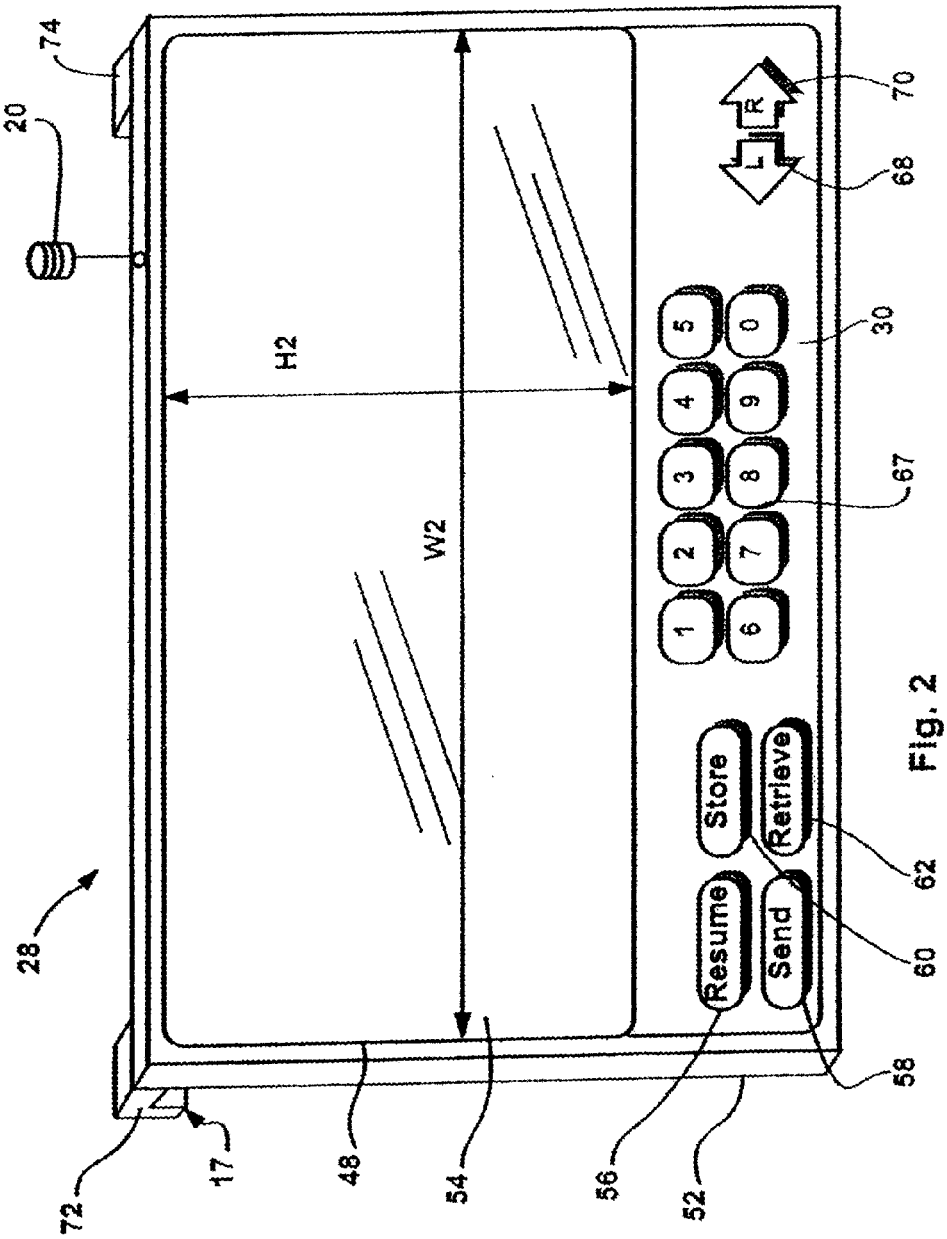
74
20
H2
W2
70
R
L
68
30
5
0
4
9
3
8
67
2
7
1
6
Store
Retrieve
62
Resume
Send
60
58
28
72
17
48
54
56
52

Fig. 2

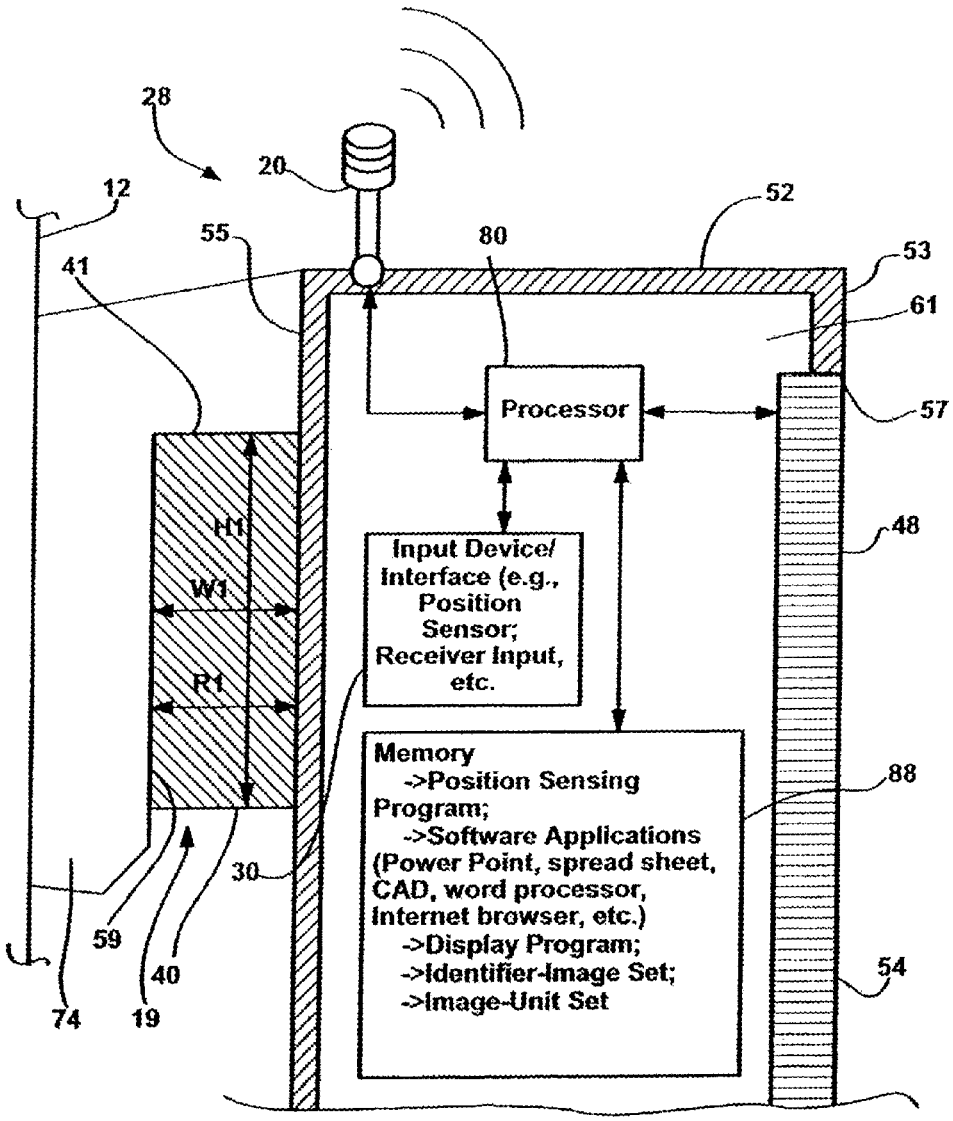
28
20
12
52
55
80
53
41
61
Processor
57
H1
W1
R1
48
Input Device/ Interface (e.g., Position Sensor; Receiver Input, etc.
Memory
->Position Sensing Program;
->Software Applications (Power Point, spread sheet, CAD, word processor, Internet browser, etc.)
->Display Program;
->Identifier-Image Set;
->Image-Unit Set
88
30
59
40
54
74
19

Fig. 3

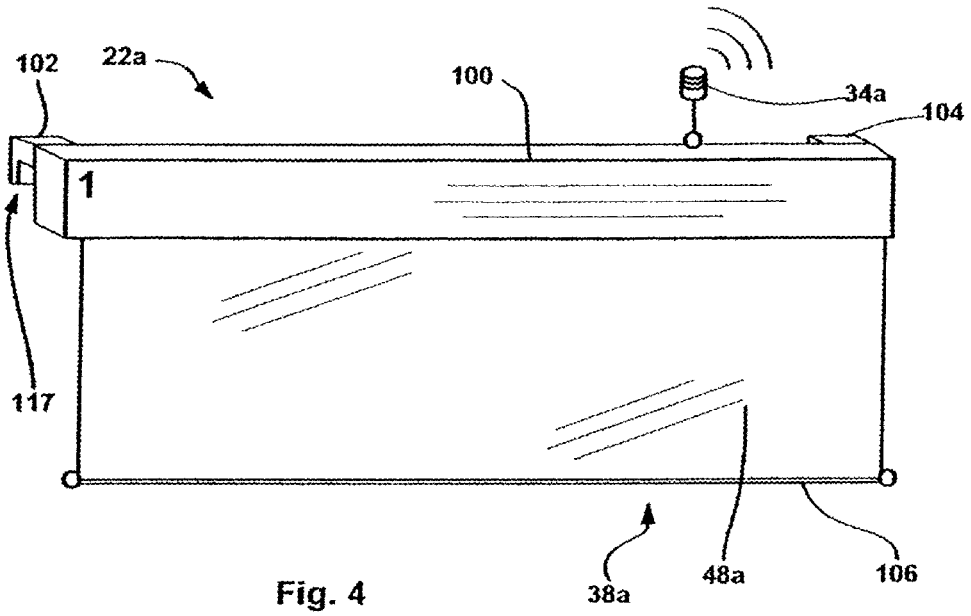

Fig. 4

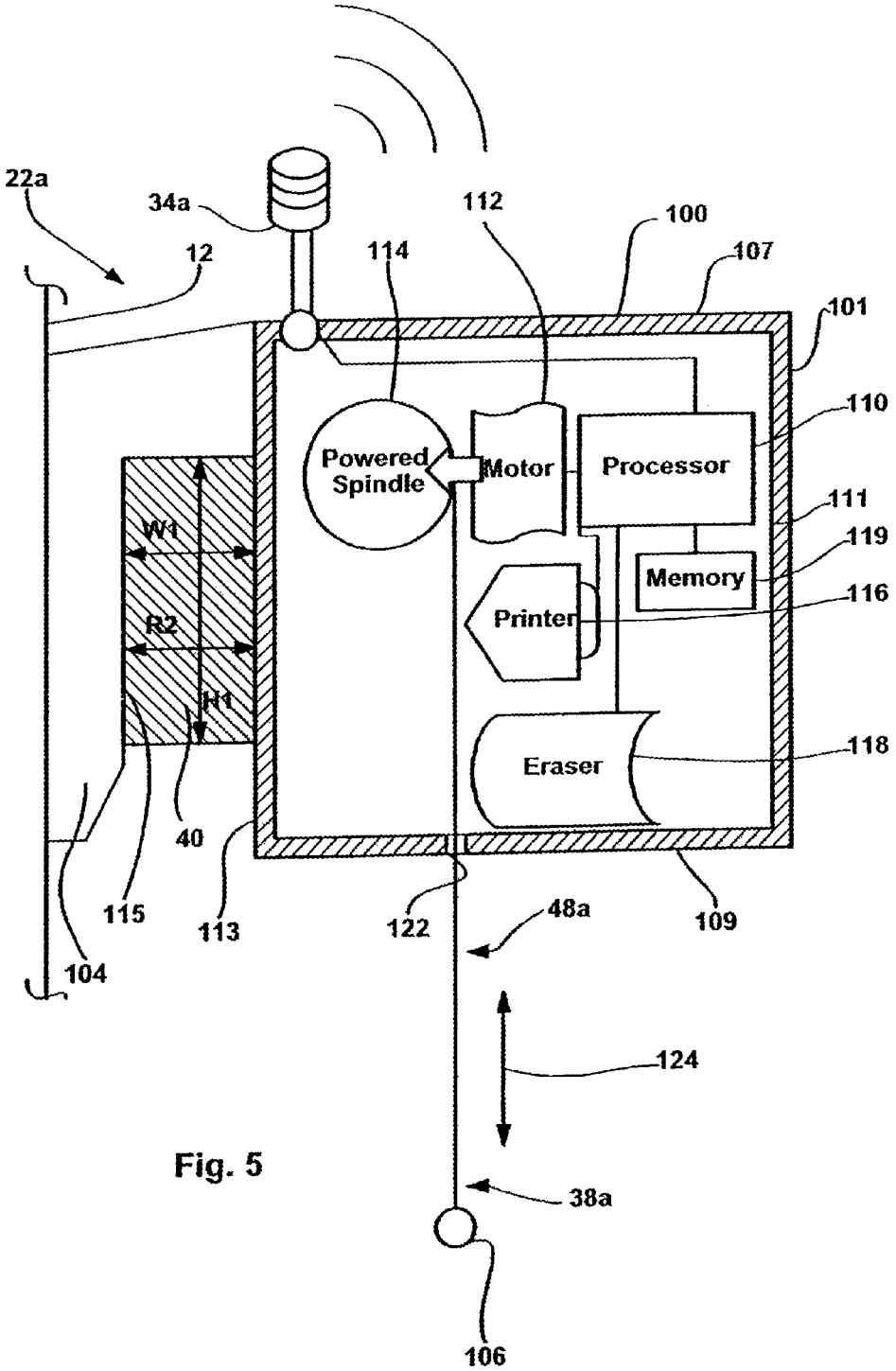
22a
34a
12
112
114
100
107
101
110
Powered Spindle
Motor
Processor
111
119
Memory
116
Printer
W1
R2
H1
118
Eraser
40
115
113
122
48a
109
104
124
38a
106

Fig. 5

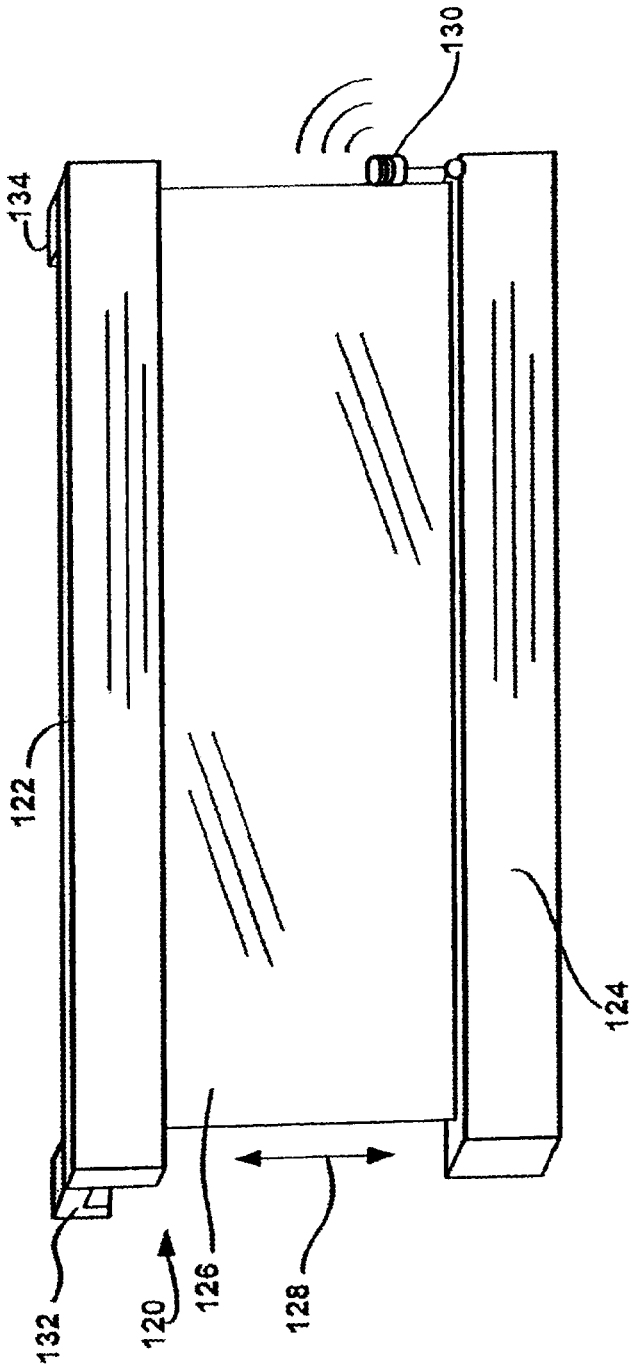

Fig. 6

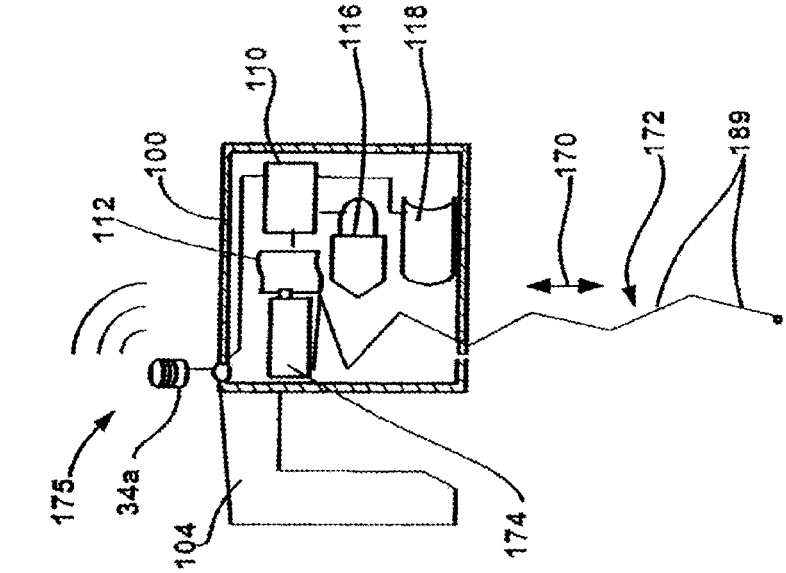

Fig. 9

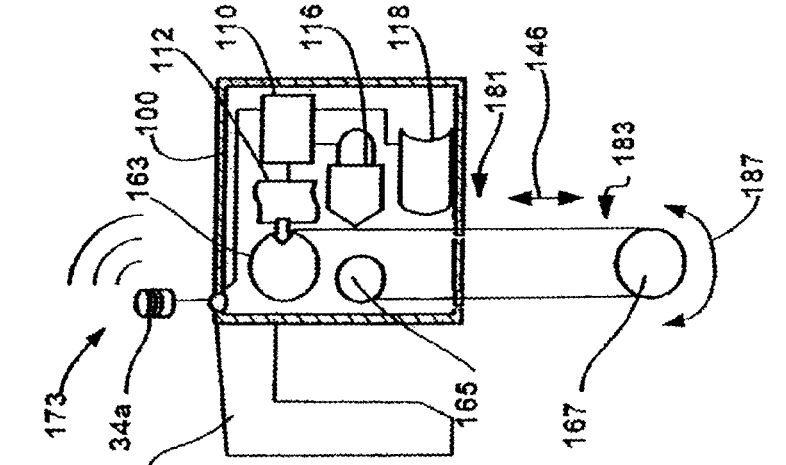

Fig. 8

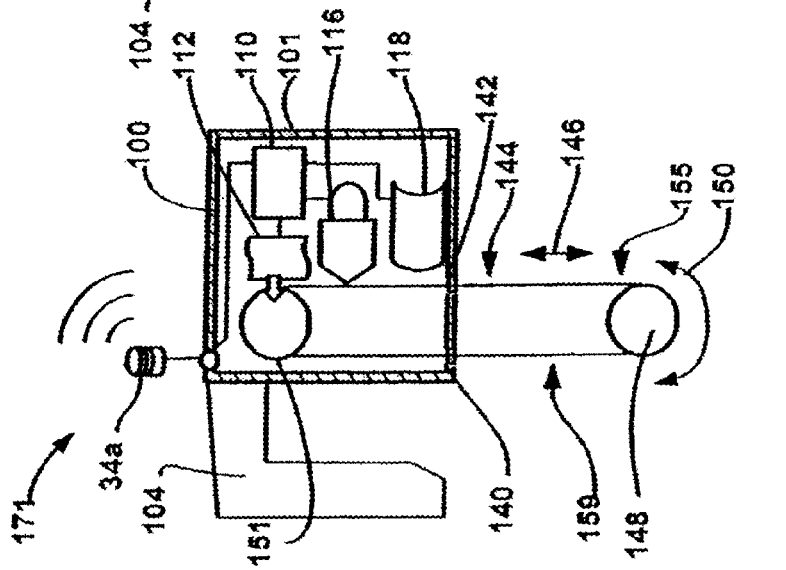

Fig. 7

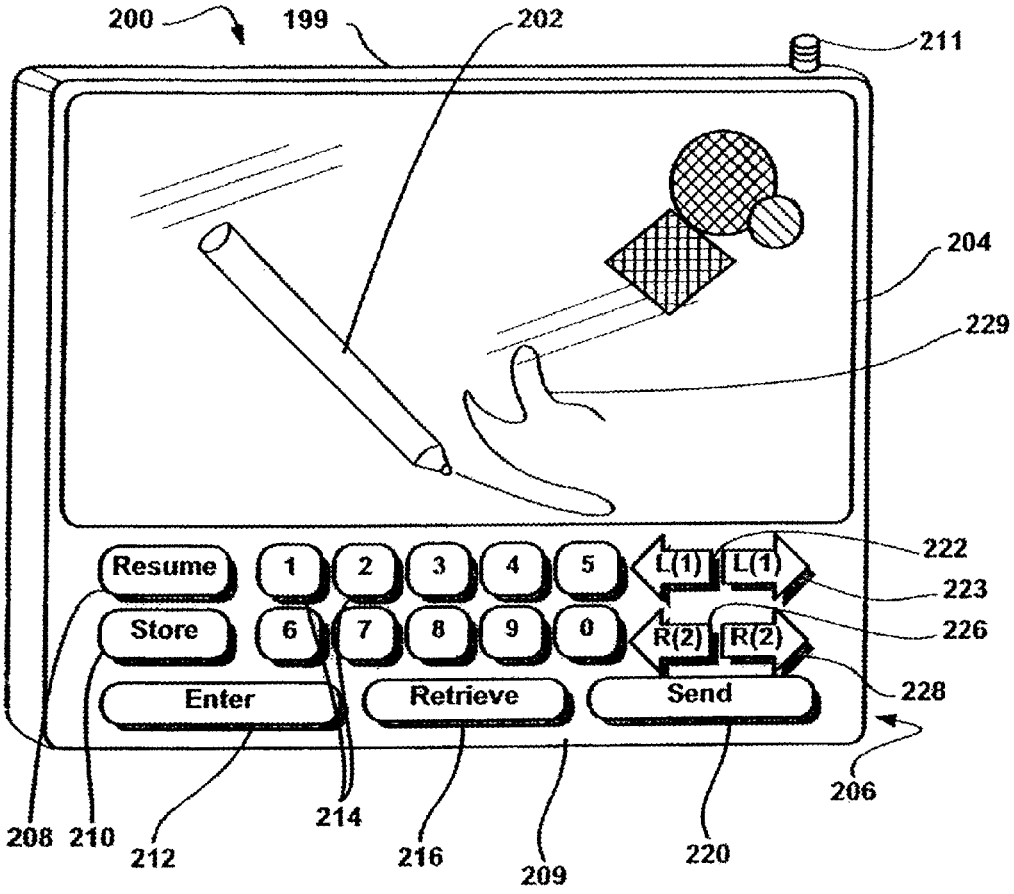

Fig. 10a

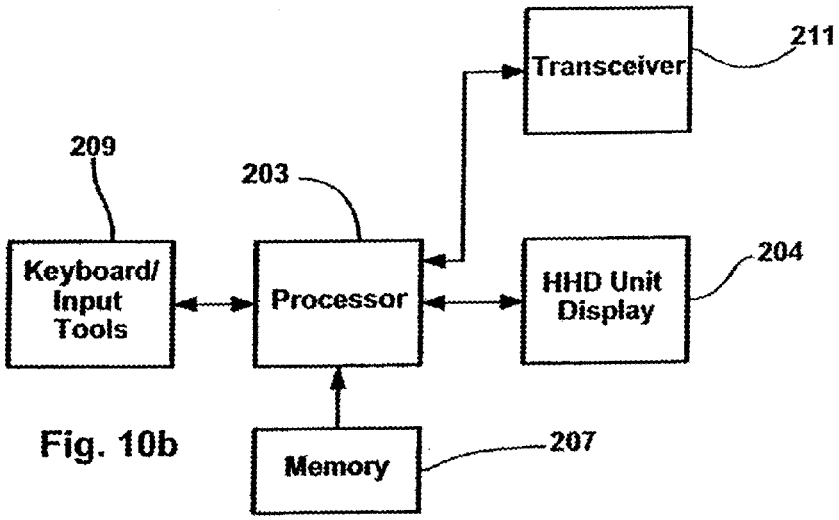

Fig. 10b

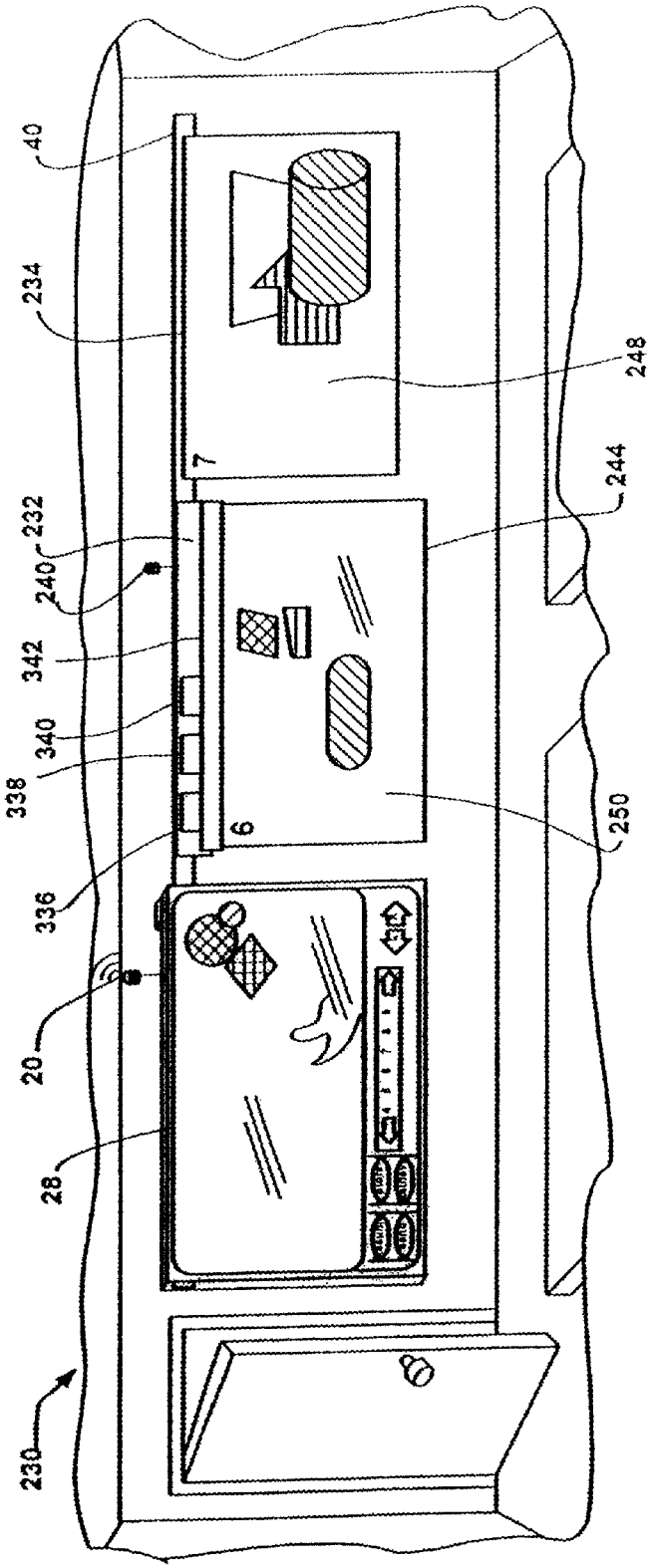

Fig. 11

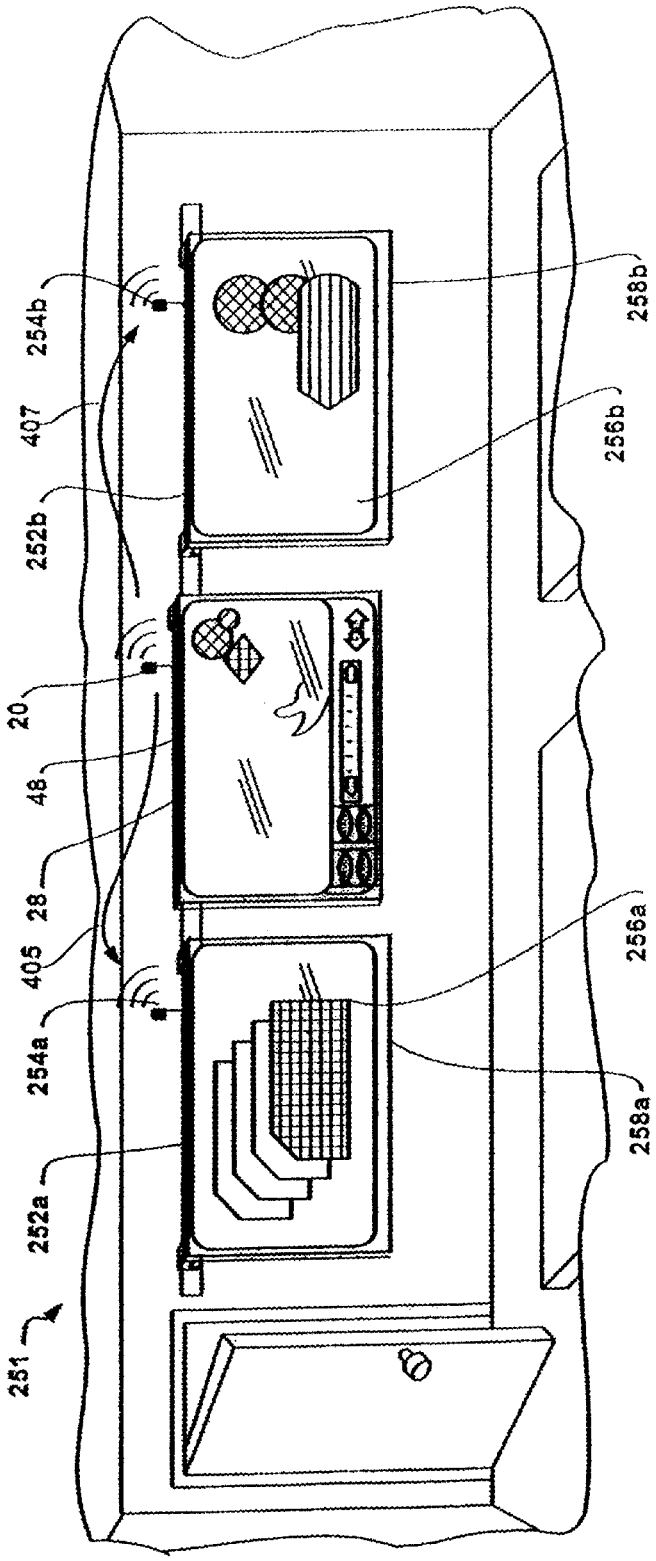

Fig. 12

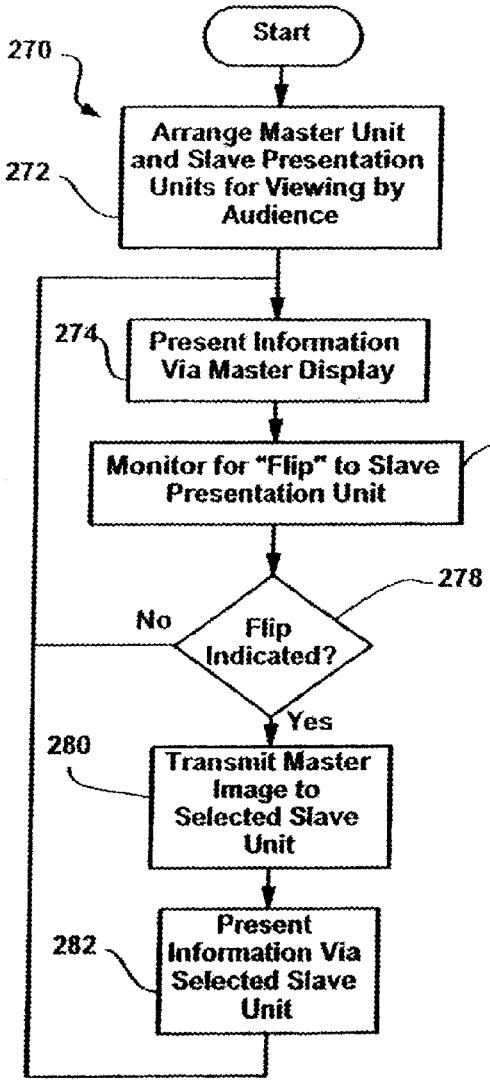
Start
270
Arrange Master Unit and Slave Presentation Units for Viewing by Audience
272
Present Information Via Master Display
274
Monitor for "Flip" to Slave Presentation Unit
276
Flip Indicated?
278
No
Yes
Transmit Master Image to Selected Slave Unit
280
Present Information Via Selected Slave Unit
282

Fig. 13

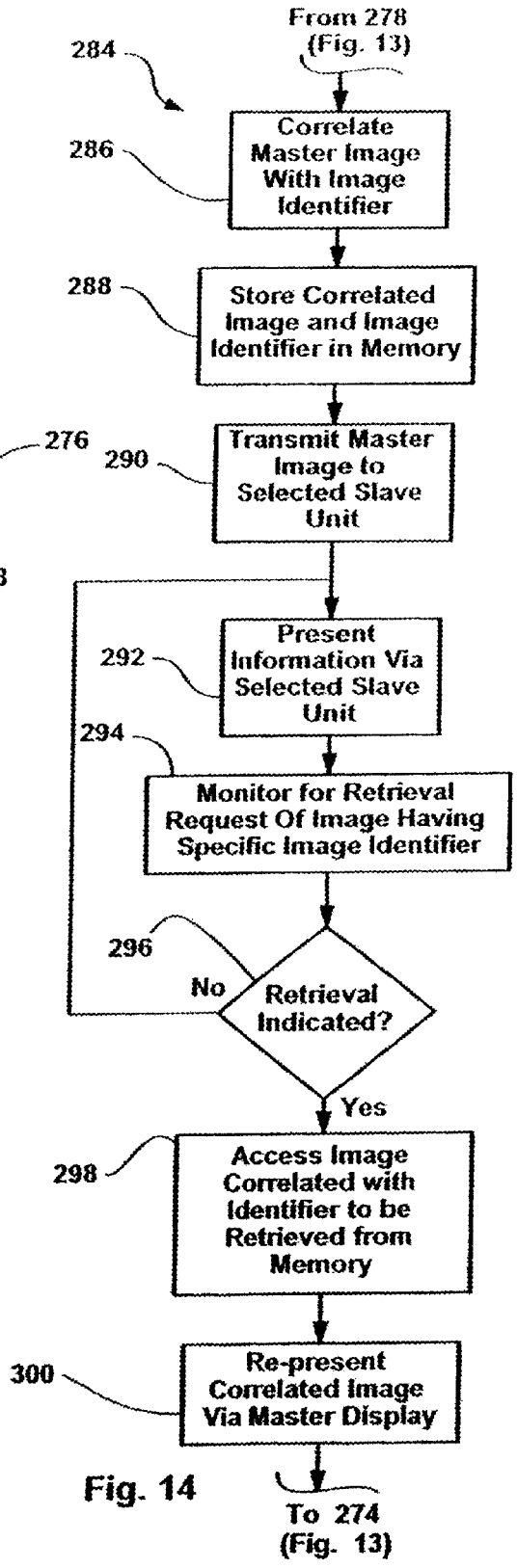
From 278 (Fig. 13)
284
Correlate Master Image With Image Identifier
286
Store Correlated Image and Image Identifier in Memory
288
Transmit Master Image to Selected Slave Unit
290
Present Information Via Selected Slave Unit
292
Monitor for Retrieval Request Of Image Having Specific Image Identifier
294
Retrieval Indicated?
296
No
Yes
Access Image Correlated with Identifier to be Retrieved from Memory
298
Re-present Correlated Image Via Master Display
300
To 274 (Fig. 13)

Fig. 14

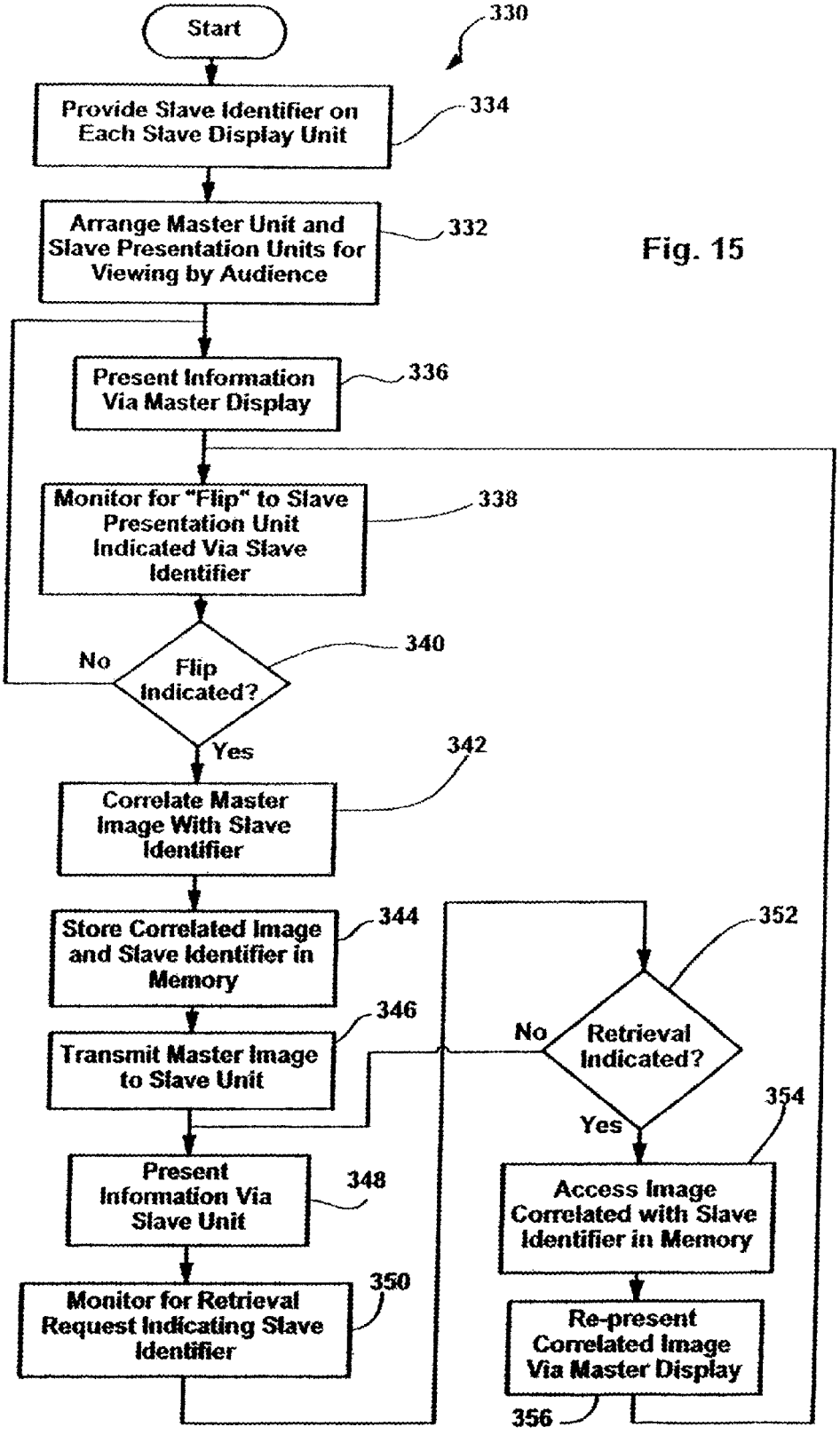
Start
330
Provide Slave Identifier on Each Slave Display Unit
334
Arrange Master Unit and Slave Presentation Units for Viewing by Audience
332
Present Information Via Master Display
336
Monitor for "Flip" to Slave Presentation Unit Indicated Via Slave Identifier
338
No
Flip Indicated?
340
Yes
Correlate Master Image With Slave Identifier
342
Store Correlated Image and Slave Identifier in Memory
344
Transmit Master Image to Slave Unit
346
Present Information Via Slave Unit
348
Monitor for Retrieval Request Indicating Slave Identifier
350
352
No
Retrieval Indicated?
Yes
354
Access Image Correlated with Slave Identifier in Memory
Re-present Correlated Image Via Master Display
356

Fig. 15

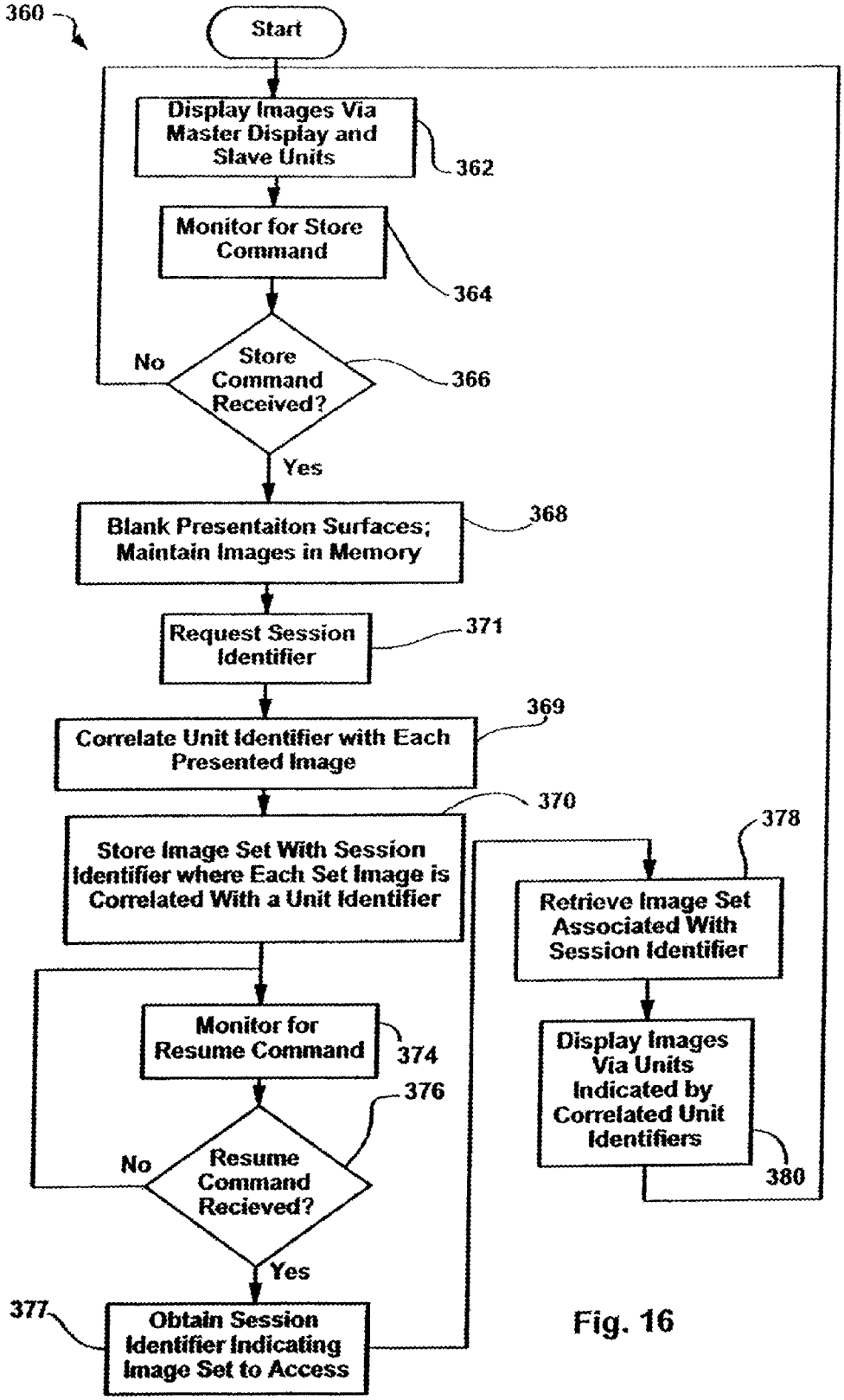
360
Start
Display Images Via Master Display and Slave Units
362
Monitor for Store Command
364
Store Command Received?
366
No
Yes
Blank Presentaiton Surfaces; Maintain Images in Memory
368
Request Session Identifier
371
Correlate Unit Identifier with Each Presented Image
369
Store Image Set With Session Identifier where Each Set Image is Correlated With a Unit Identifier
370
Monitor for Resume Command
374
Resume Command Recieved?
376
No
Yes
Obtain Session Identifier Indicating Image Set to Access
377
Retrieve Image Set Associated With Session Identifier
378
Display Images Via Units Indicated by Correlated Unit Identifiers
380

Fig. 16

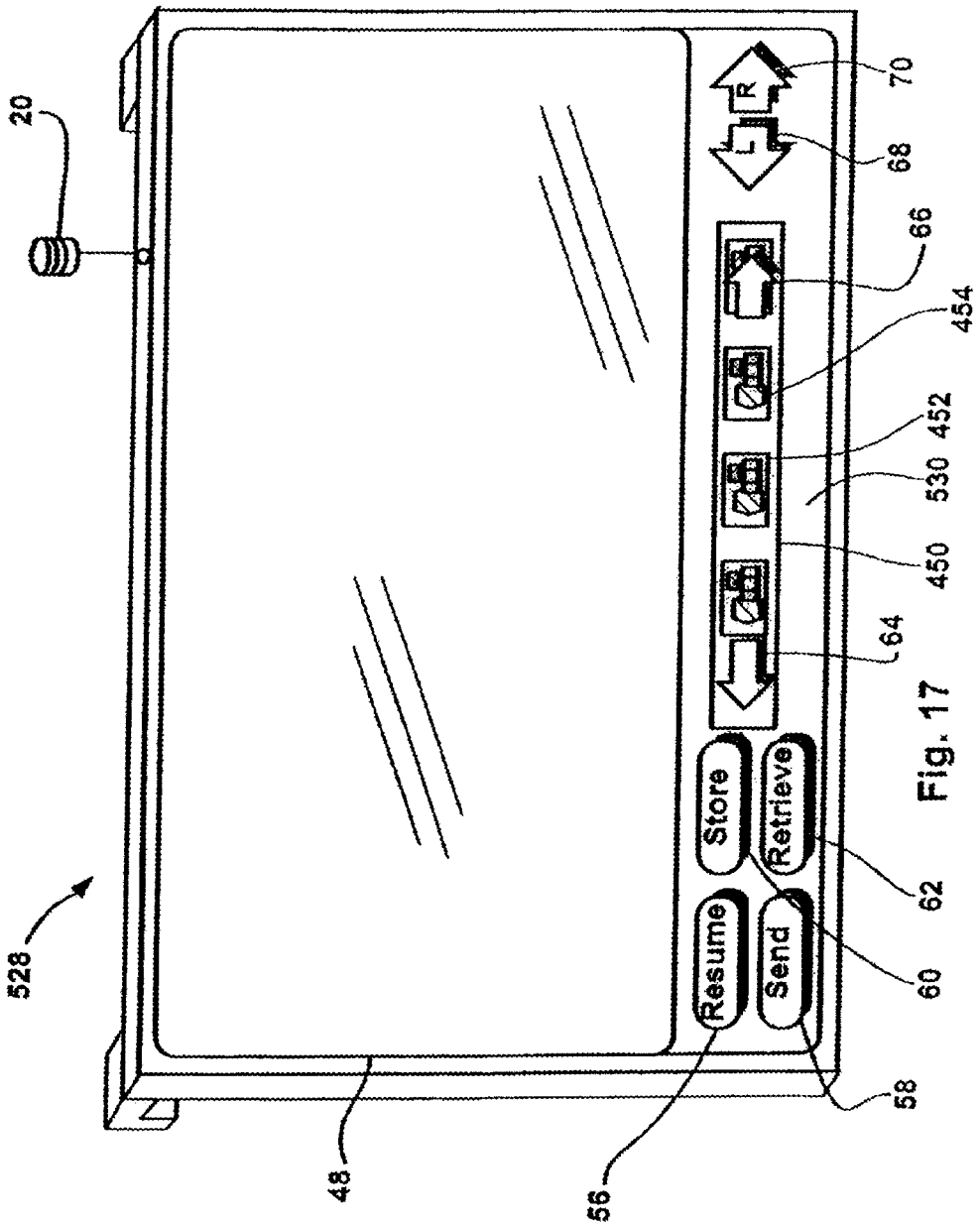
20
528
48
56
58
60
62
64
66
68
70
450
452
454
530
R
L
Store
Retrieve
Resume
Send

Fig. 17

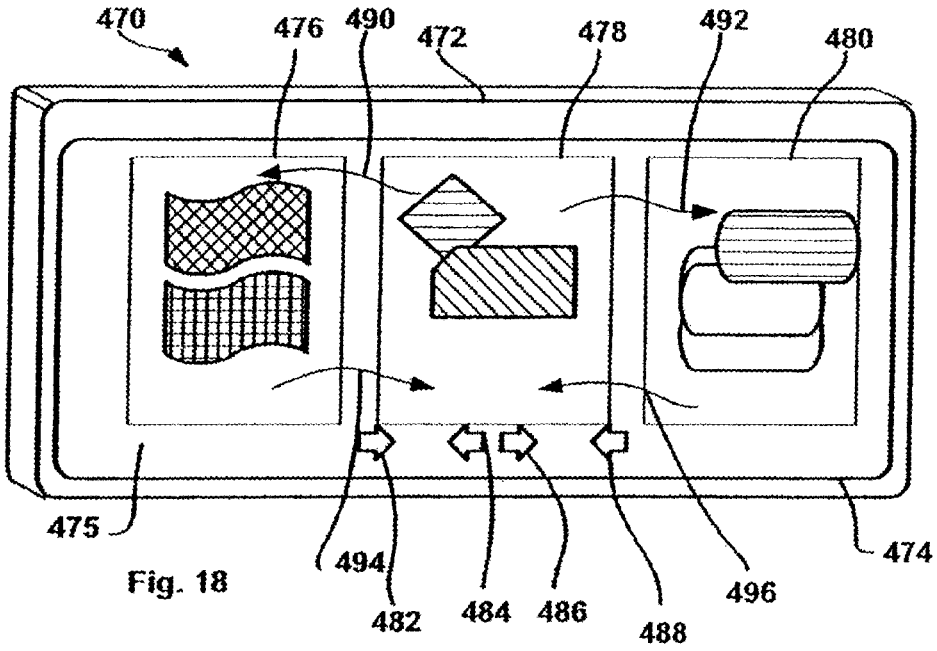
470
476
490
472
478
492
480
475
494
482
484
486
488
496
474

Fig. 18

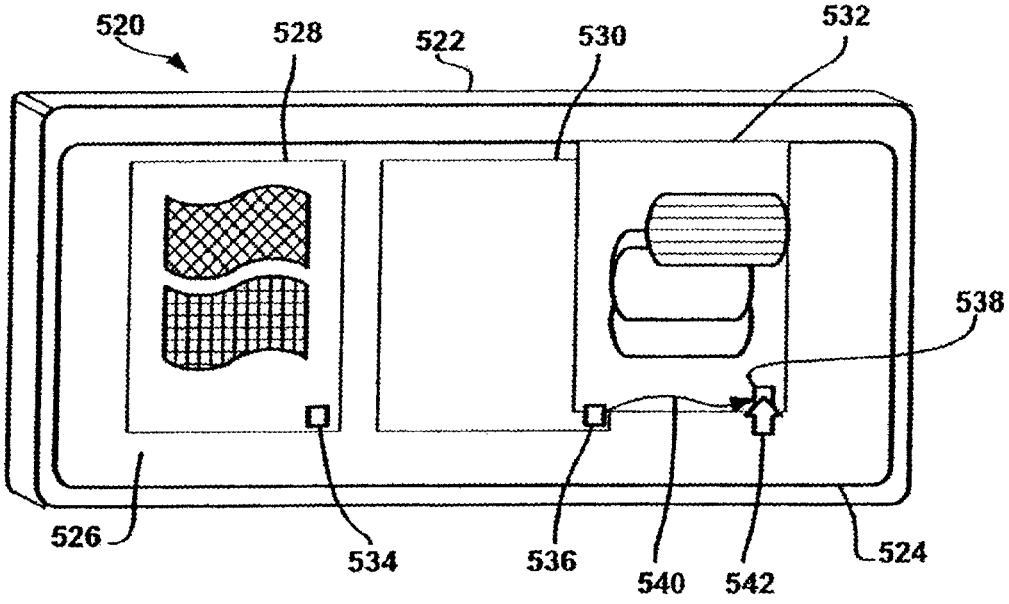
520
528
522
530
532
538
526
534
536
540
542
524

Fig. 19

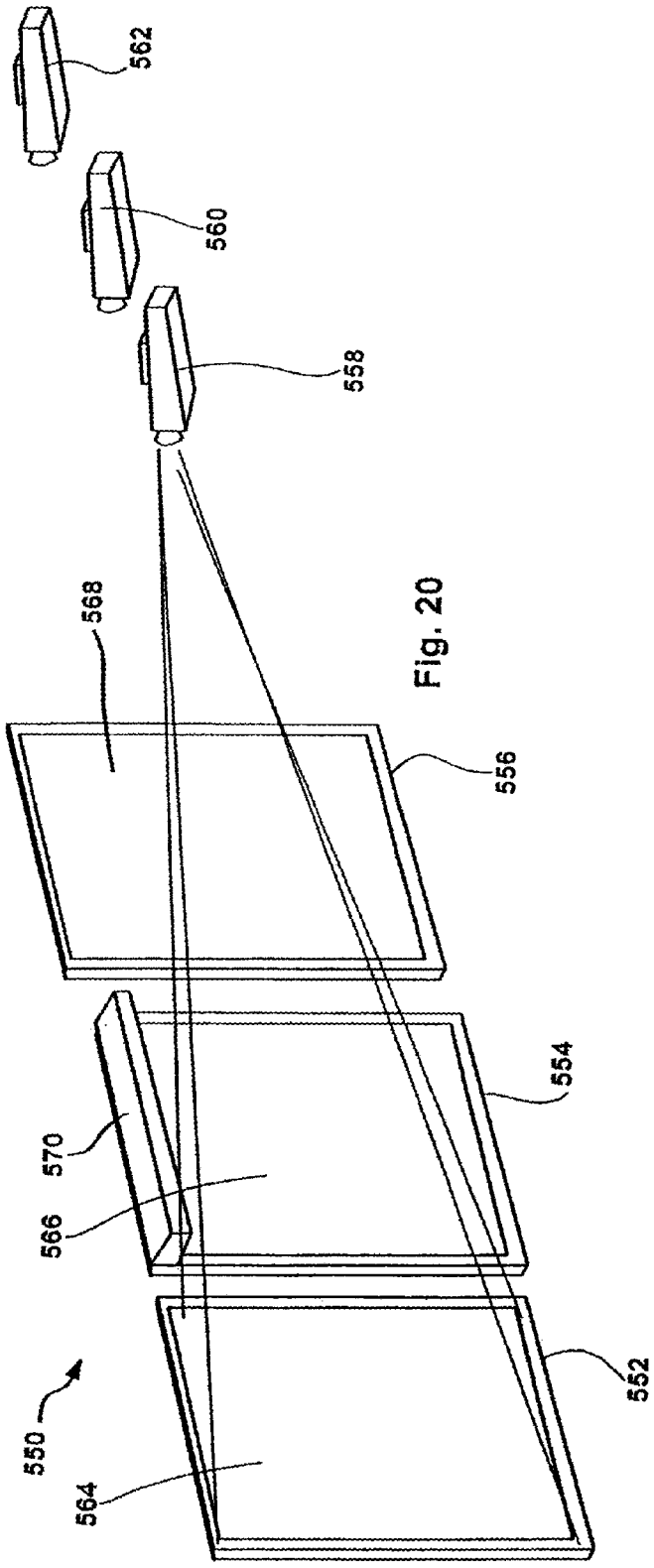

Fig. 20

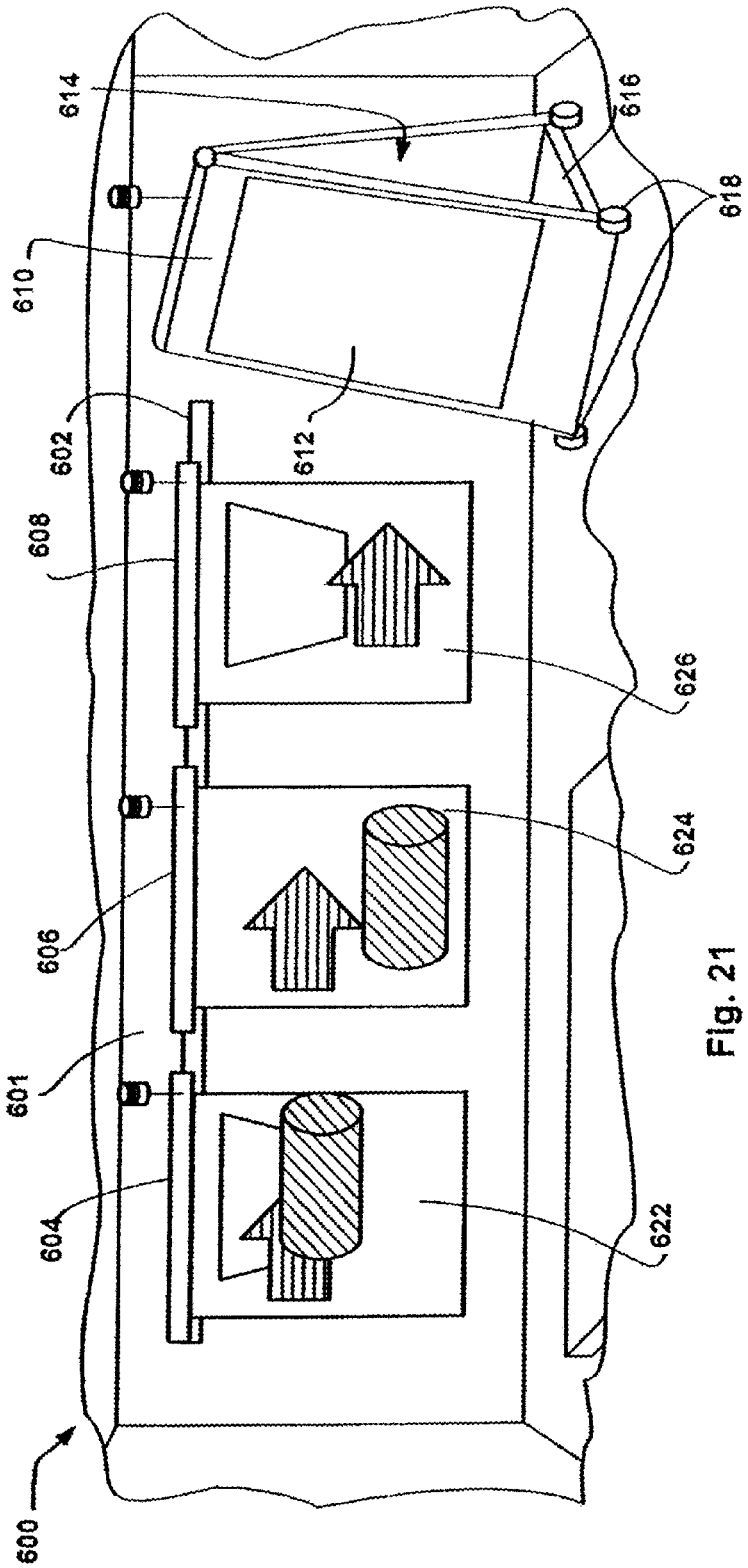

Fig. 21

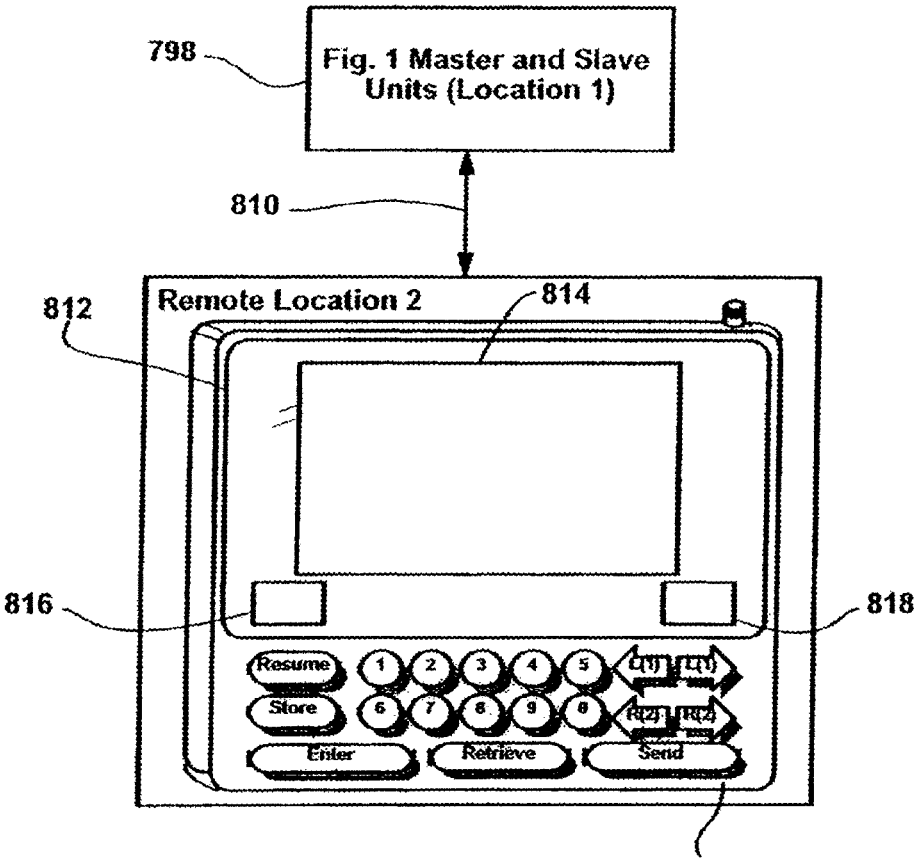
798
Fig. 1 Master and Slave Units (Location 1)
810
Remote Location 2
812
814
816
818
Resume
Store
Enter
Retrieve
Send
800

Fig. 22

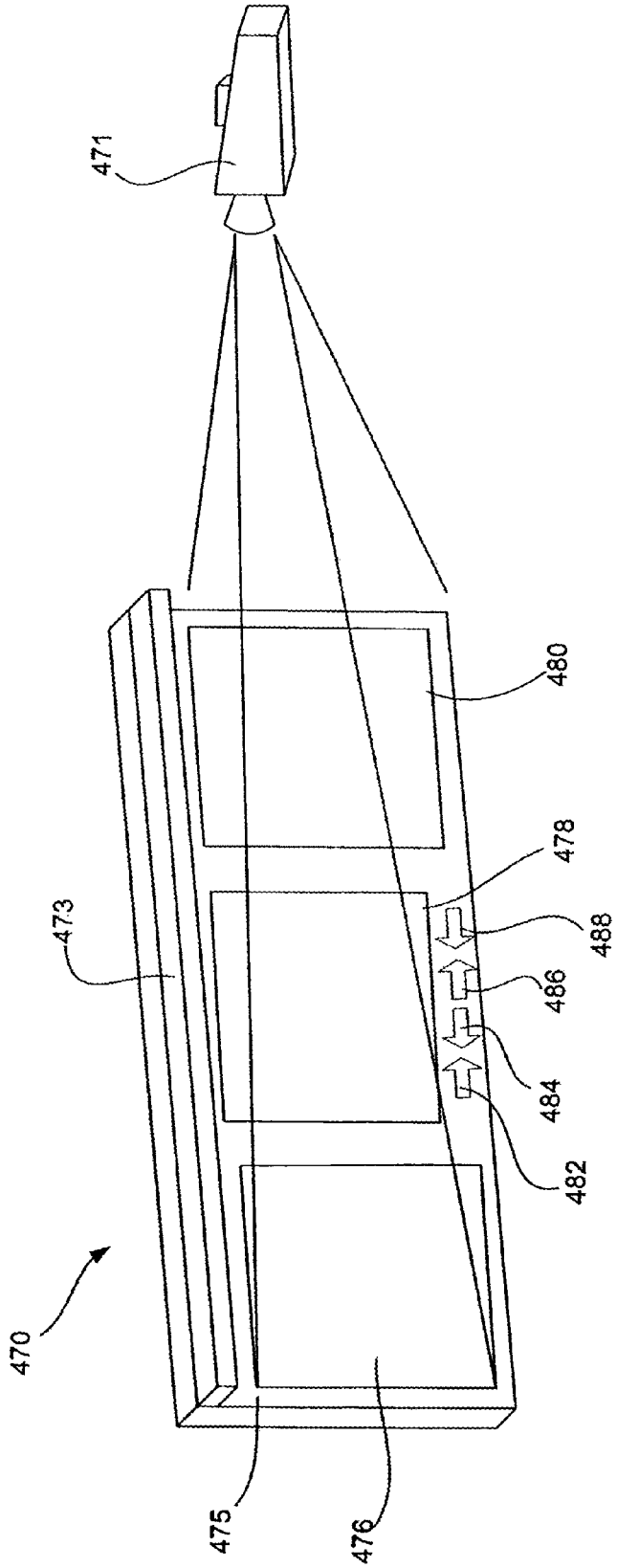

Fig. 23

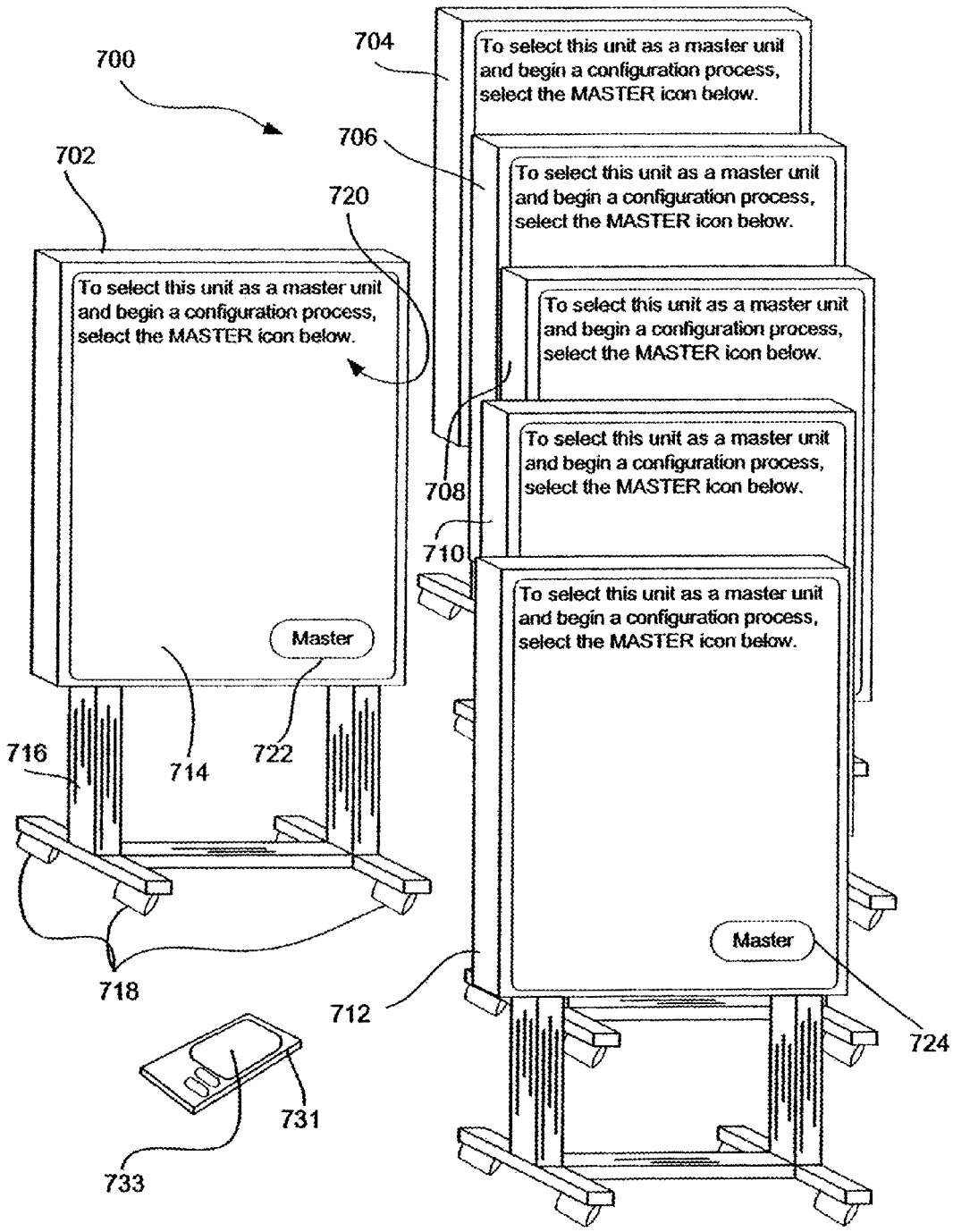
700
702
704
706
708
710
712
714
716
718
720
722
724
731
733
To select this unit as a master unit and begin a configuration process, select the MASTER icon below.
Master

Fig. 24

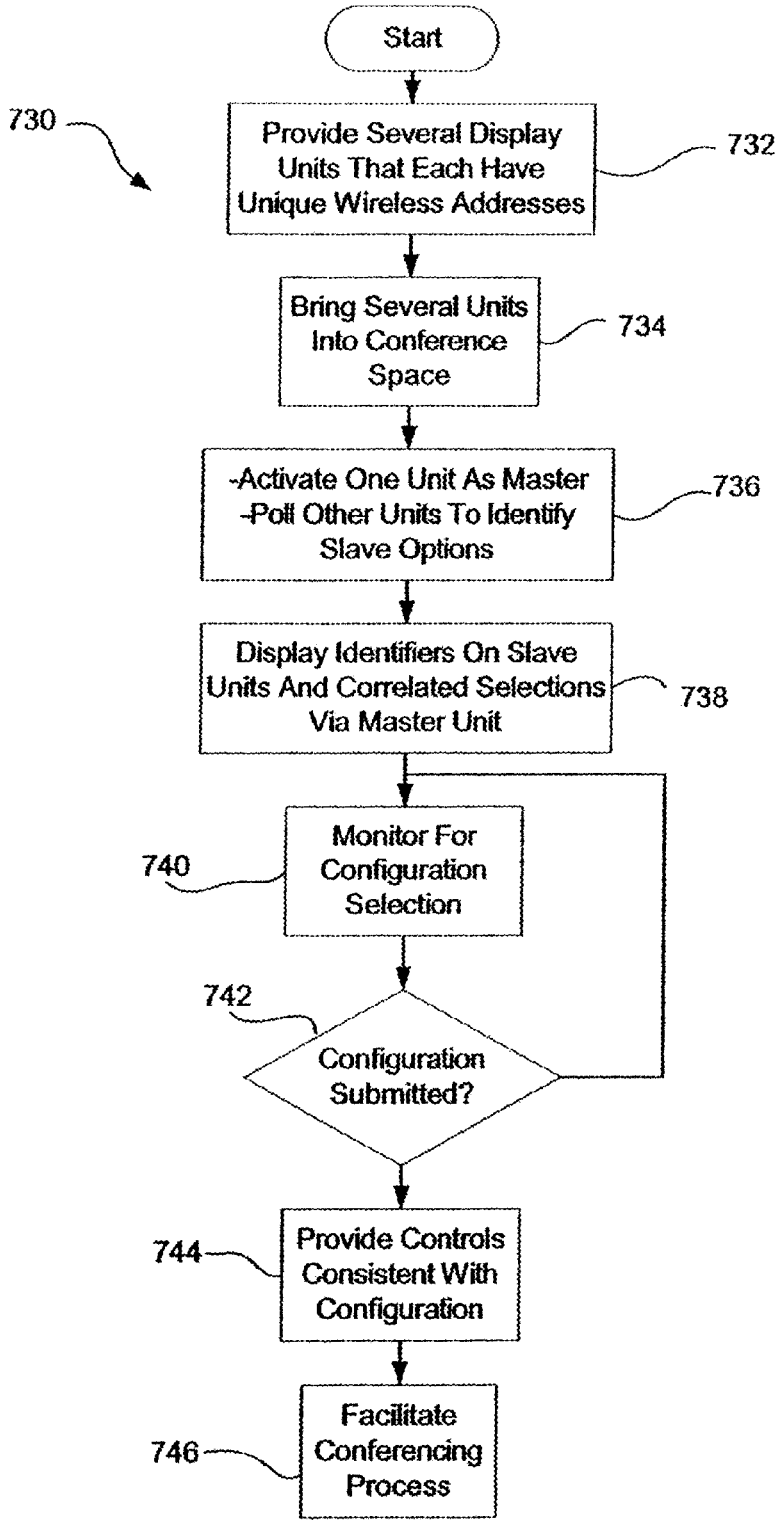
Start
730
Provide Several Display Units That Each Have Unique Wireless Addresses
732
Bring Several Units Into Conference Space
734
-Activate One Unit As Master
-Poll Other Units To Identify Slave Options
736
Display Identifiers On Slave Units And Correlated Selections Via Master Unit
738
Monitor For Configuration Selection
740
742
Configuration Submitted?
Provide Controls Consistent With Configuration
744
Facilitate Conferencing Process
746

Fig. 25

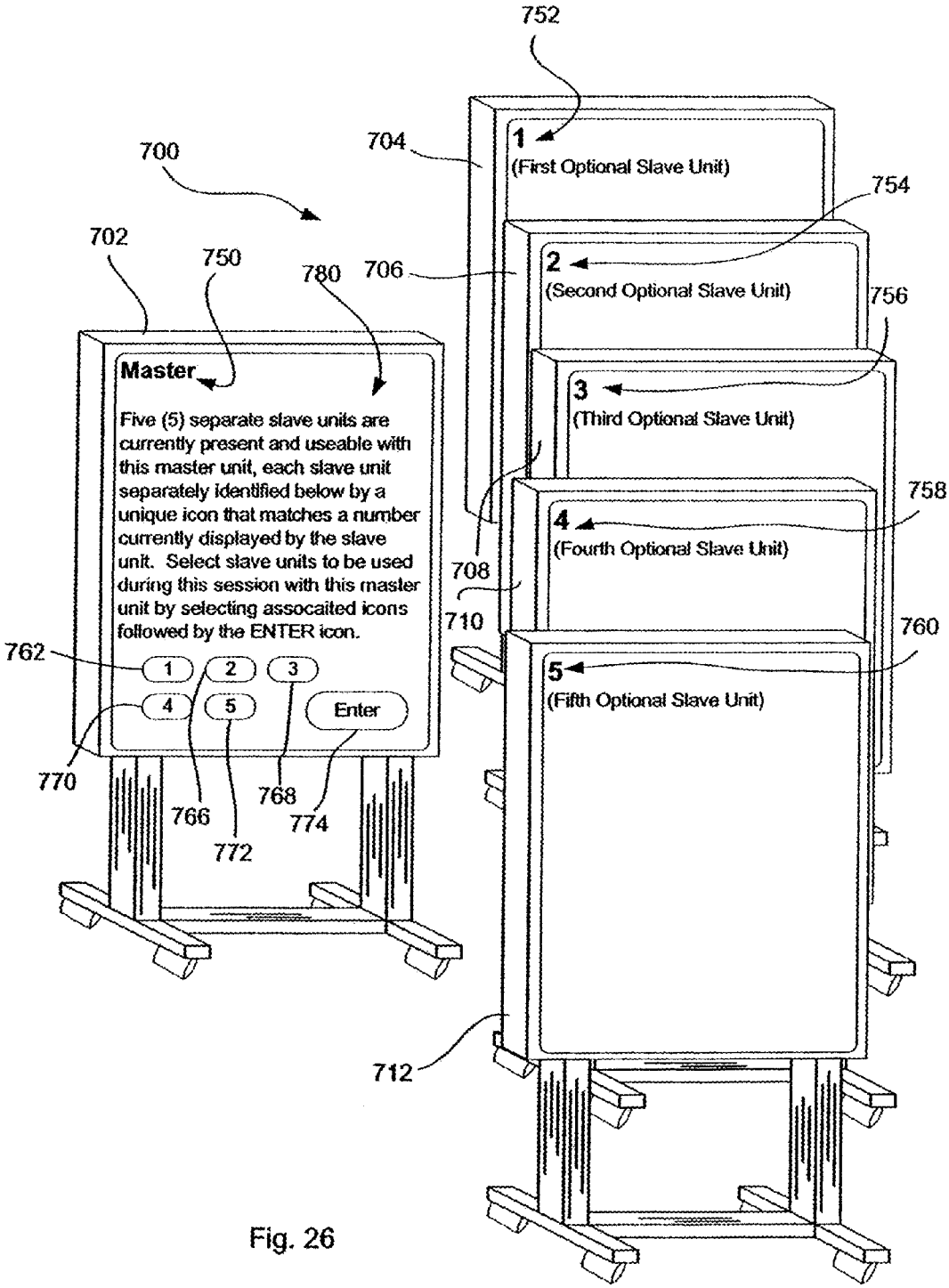
752
704
700
1
(First Optional Slave Unit)
754
702
750
780
706
2
(Second Optional Slave Unit)
756
Master
3
(Third Optional Slave Unit)
Five (5) separate slave units are currently present and useable with this master unit, each slave unit separately identified below by a unique icon that matches a number currently displayed by the slave unit. Select slave units to be used during this session with this master unit by selecting assocaited icons followed by the ENTER icon.
758
4
(Fourth Optional Slave Unit)
708
710
760
762
1
2
3
5
(Fifth Optional Slave Unit)
4
5
Enter
770
766
768
774
772
712

Fig. 26

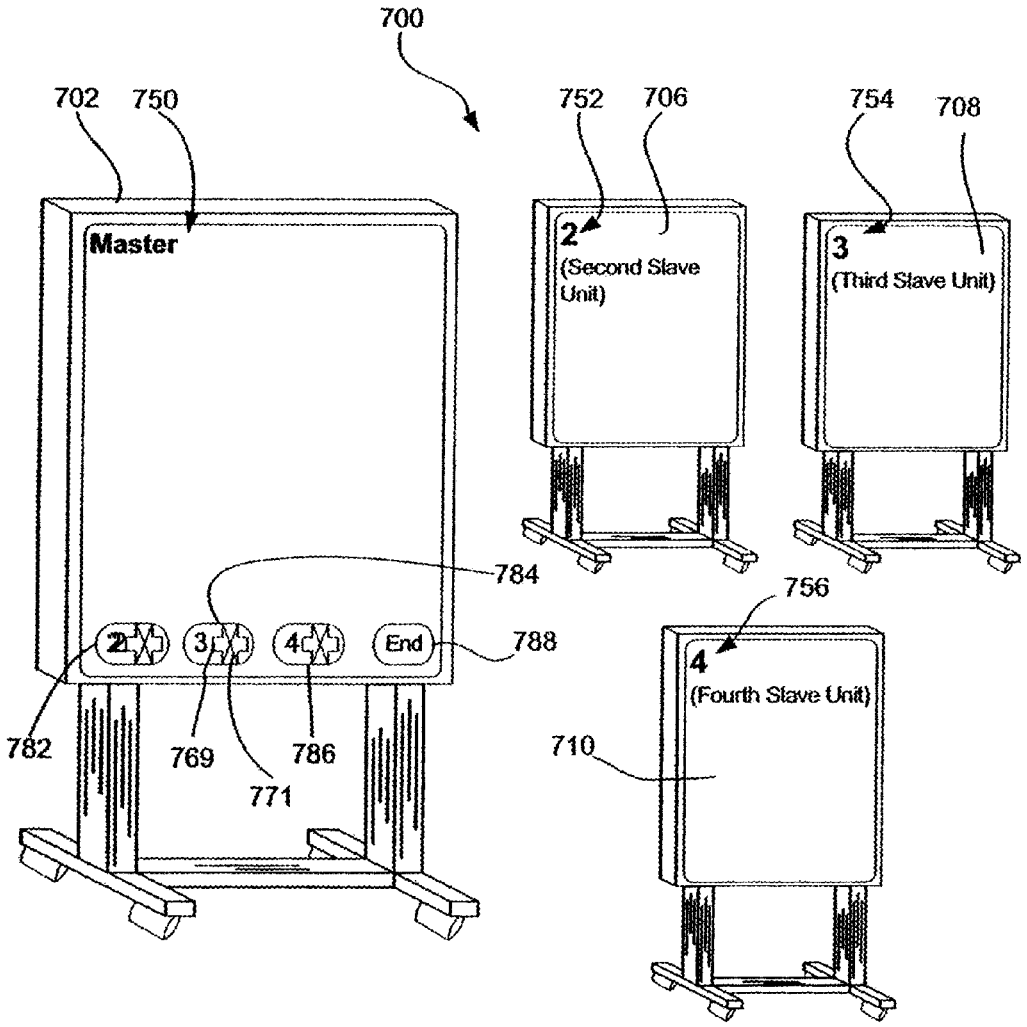
700
702
750
752
706
754
708
Master
2
(Second Slave Unit)
3
(Third Slave Unit)
784
756
2
3
4
End
788
4
(Fourth Slave Unit)
782
769
786
771
710

Fig. 27

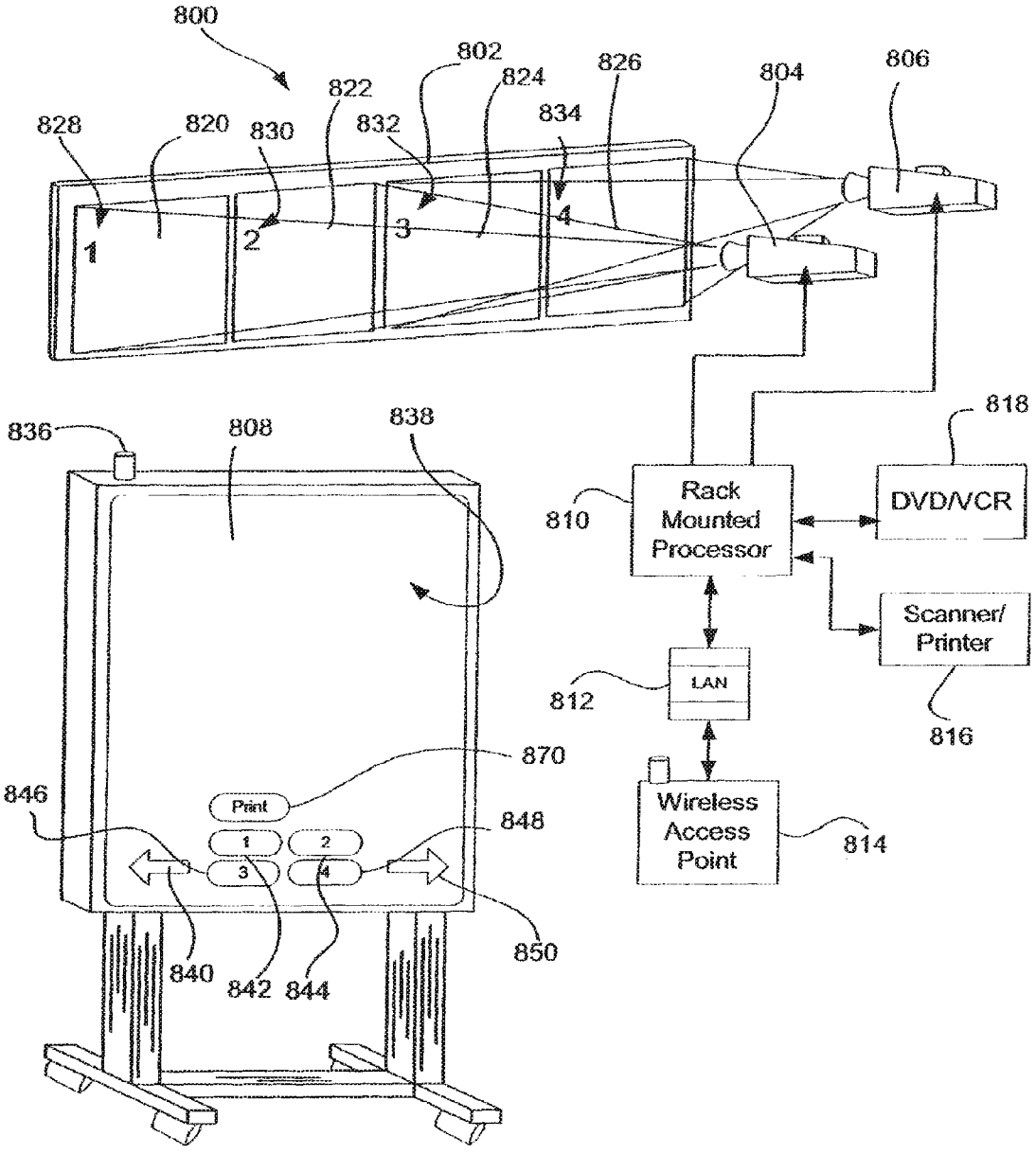
800
802
822
824
826
804
806
828
820
830
832
834
1
2
3
4
836
808
838
818
Rack Mounted Processor
810
DVD/VCR
Scanner/ Printer
LAN
812
816
870
846
Print
1
2
3
4
848
Wireless Access Point
814
850
840
842
844

Fig. 28

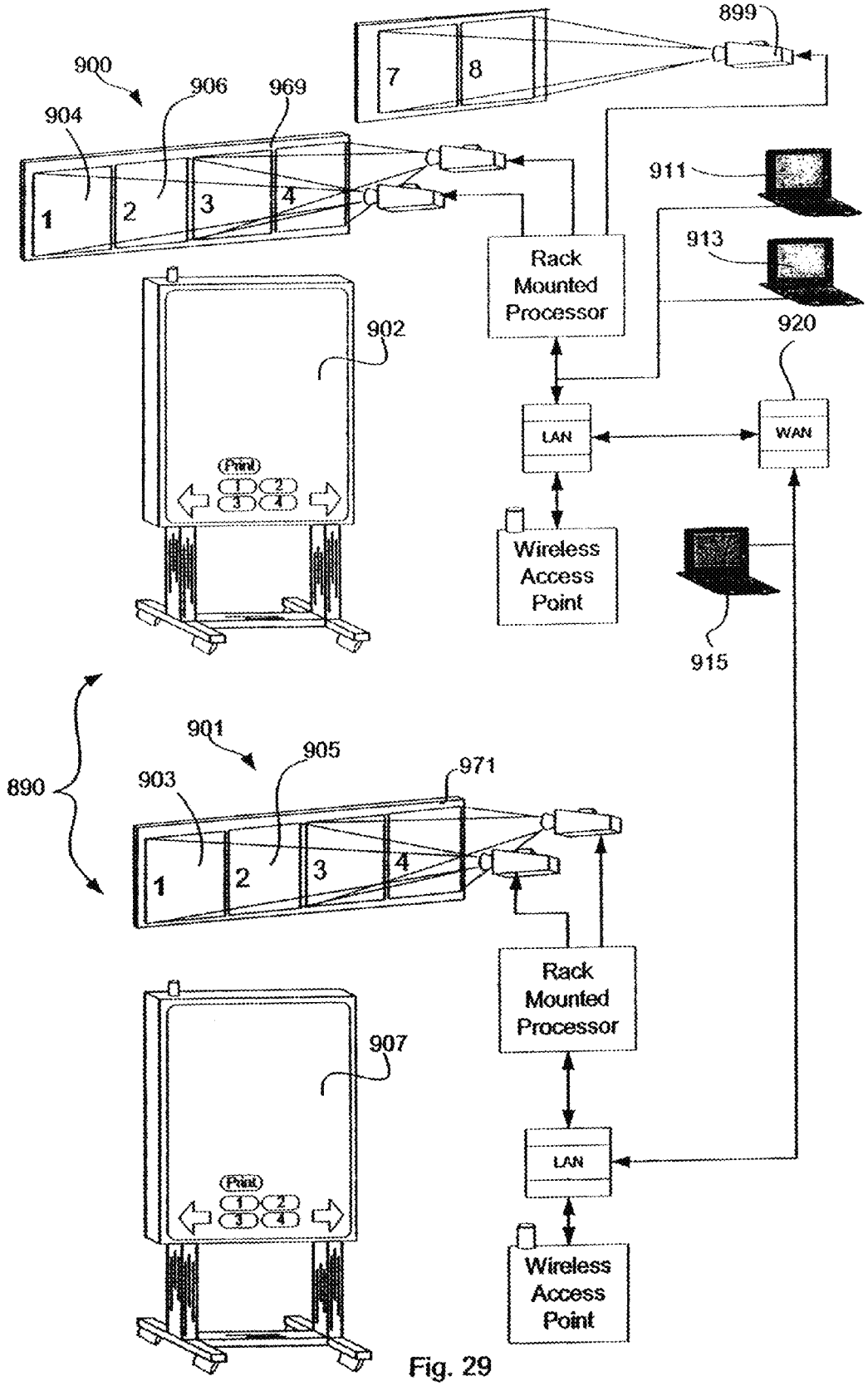
899
900
906
969
904
7
8
1
2
3
4
911
913
Rack Mounted Processor
902
920
LAN
WAN
Print
Wireless Access Point
915
890
901
905
971
903
1
2
3
4
Rack Mounted Processor
907
LAN
Print
Wireless Access Point

Fig. 29

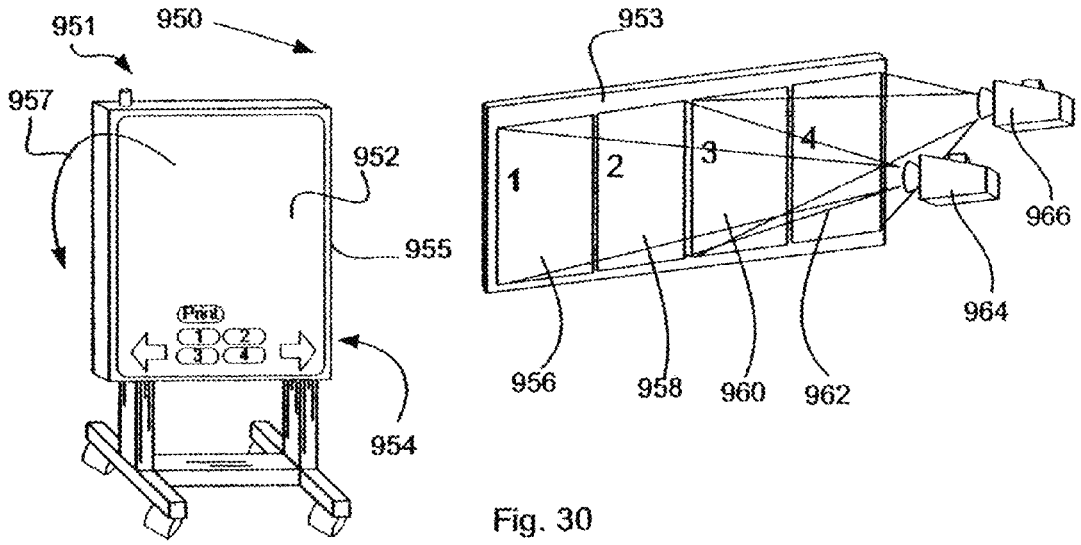
951
950
957
952
955
954
953
1
2
3
4
966
964
956
958
960
962

Fig. 30

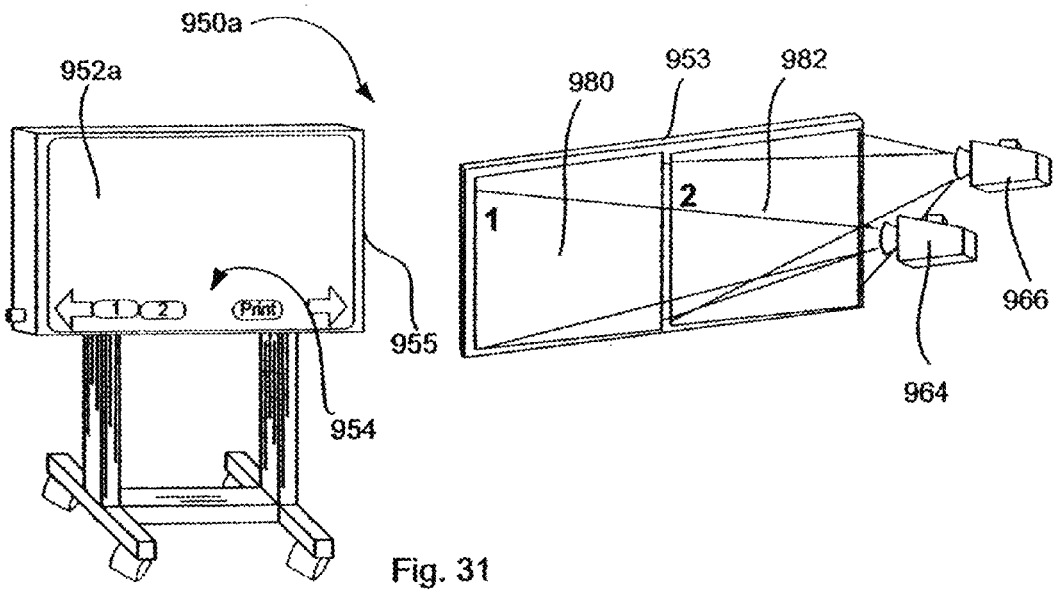
950a
952a
955
954
953
982
980
1
2
966
964

Fig. 31

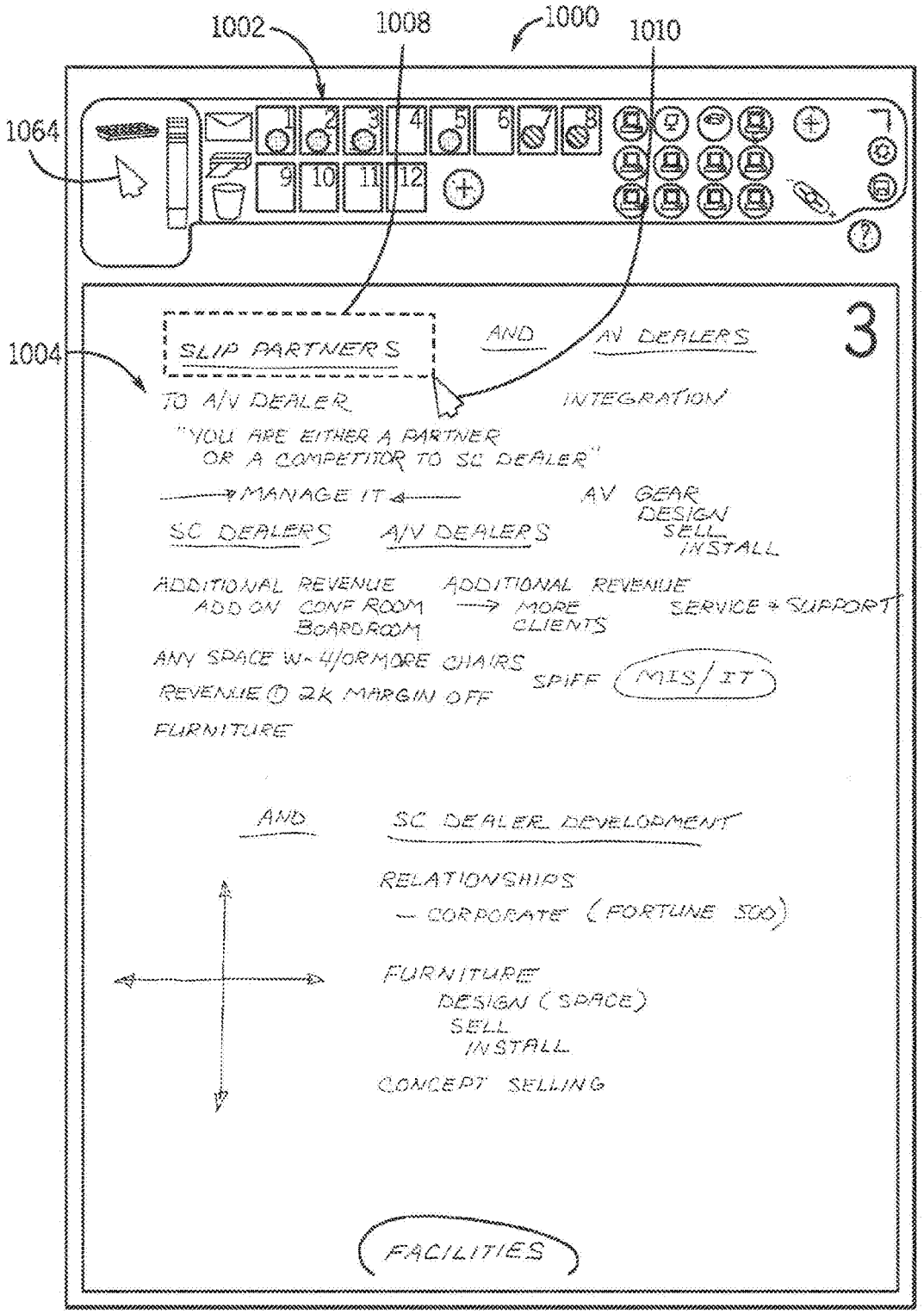
1002
1008
1000
1010
1064
1004
SLIP PARTNERS
AND
AV DEALERS
3
TO A/V DEALER
INTEGRATION
"YOU ARE EITHER A PARTNER OR A COMPETITOR TO SC DEALER"
MANAGE IT
AV GEAR
DESIGN
SELL
INSTALL
SC DEALERS
A/V DEALERS
ADDITIONAL REVENUE
ADD ON CONF ROOM
BOARDROOM
ADDITIONAL REVENUE
MORE CLIENTS
SERVICE + SUPPORT
ANY SPACE W-4/OR MORE CHAIRS
REVENUE @ 2K MARGIN OFF
FURNITURE
SPIFF
MIS/IT
AND
SC DEALER DEVELOPMENT
RELATIONSHIPS
— CORPORATE (FORTUNE 500)
FURNITURE
DESIGN (SPACE)
SELL
INSTALL
CONCEPT SELLING
FACILITIES

FIG. 32

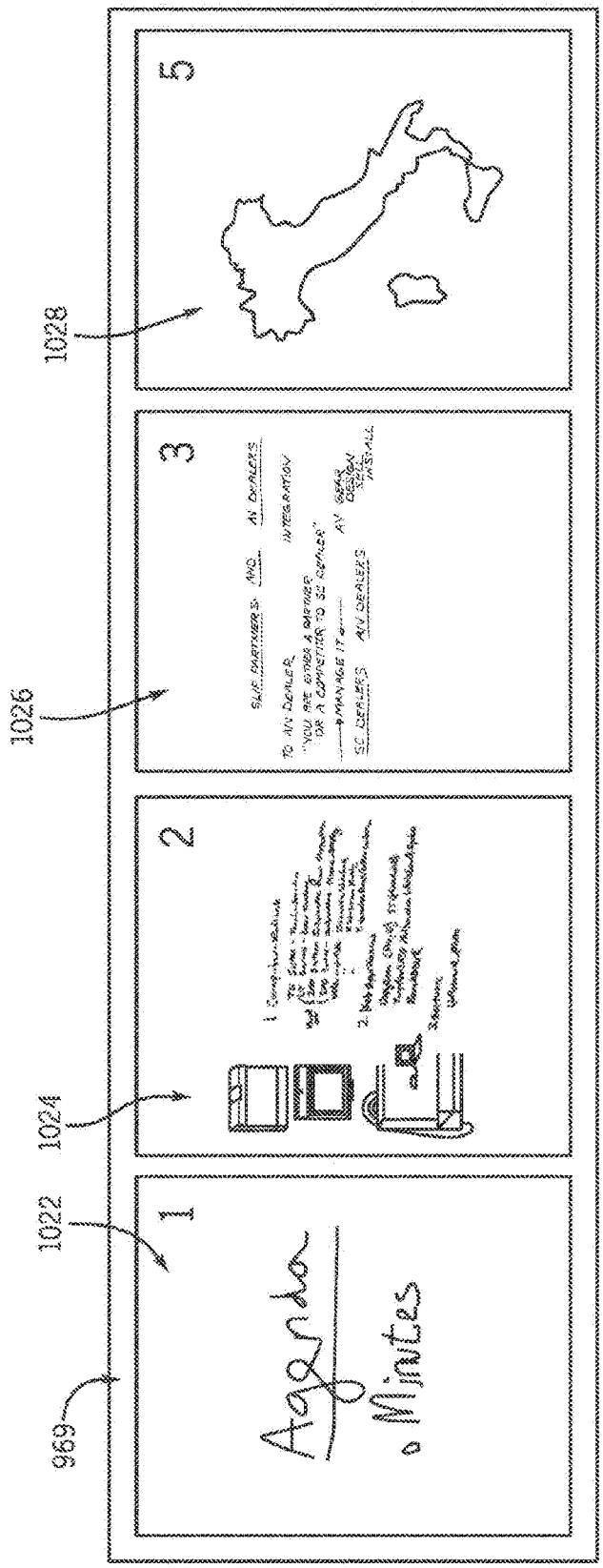

FIG. 33

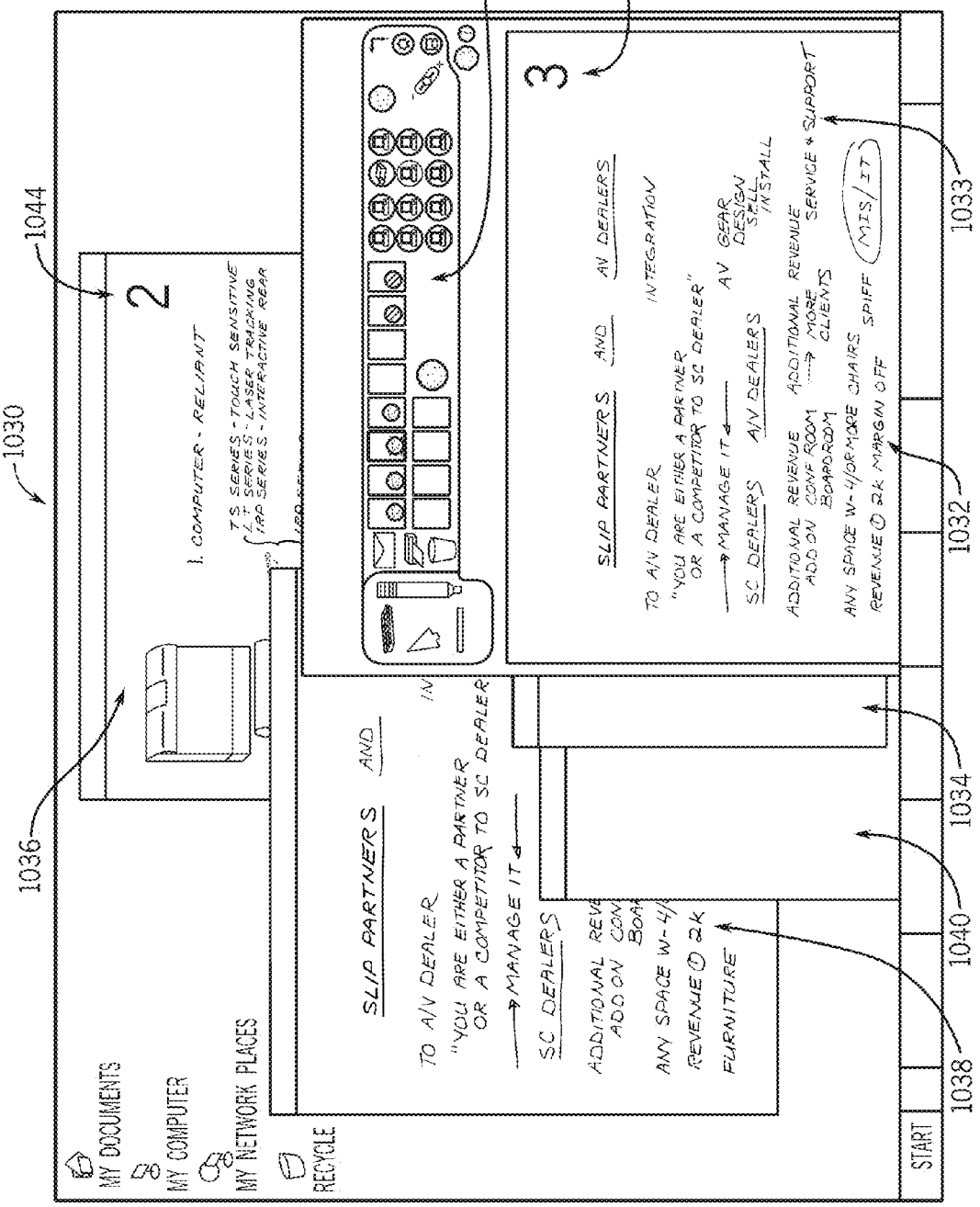
1030
1031
1032
1033
1034
1036
1038
1040
1042
1044
MY DOCUMENTS
MY COMPUTER
MY NETWORK PLACES
RECYCLE
START
1. COMPUTER - RELIANT
TS SERIES - TOUCH SENSITIVE
LT SERIES - LASER TRACKING
IAD SERIES - INTERACTIVE REAR
2
3
SLIP PARTNERS AND AV DEALERS
INTEGRATION
TO A/V DEALER
"YOU ARE EITHER A PARTNER
OR A COMPETITOR TO SC DEALER"
MANAGE IT
SC DEALERS
A/V DEALERS
AV GEAR DESIGN SELL INSTALL
ADDITIONAL REVENUE ADD ON CONF ROOM BOARDROOM
MORE CLIENTS
SERVICE + SUPPORT
ANY SPACE W-4/OR MORE CHAIRS
REVENUE @ 2K MARGIN OFF
SPIFF
MIS/IT

FIG. 34

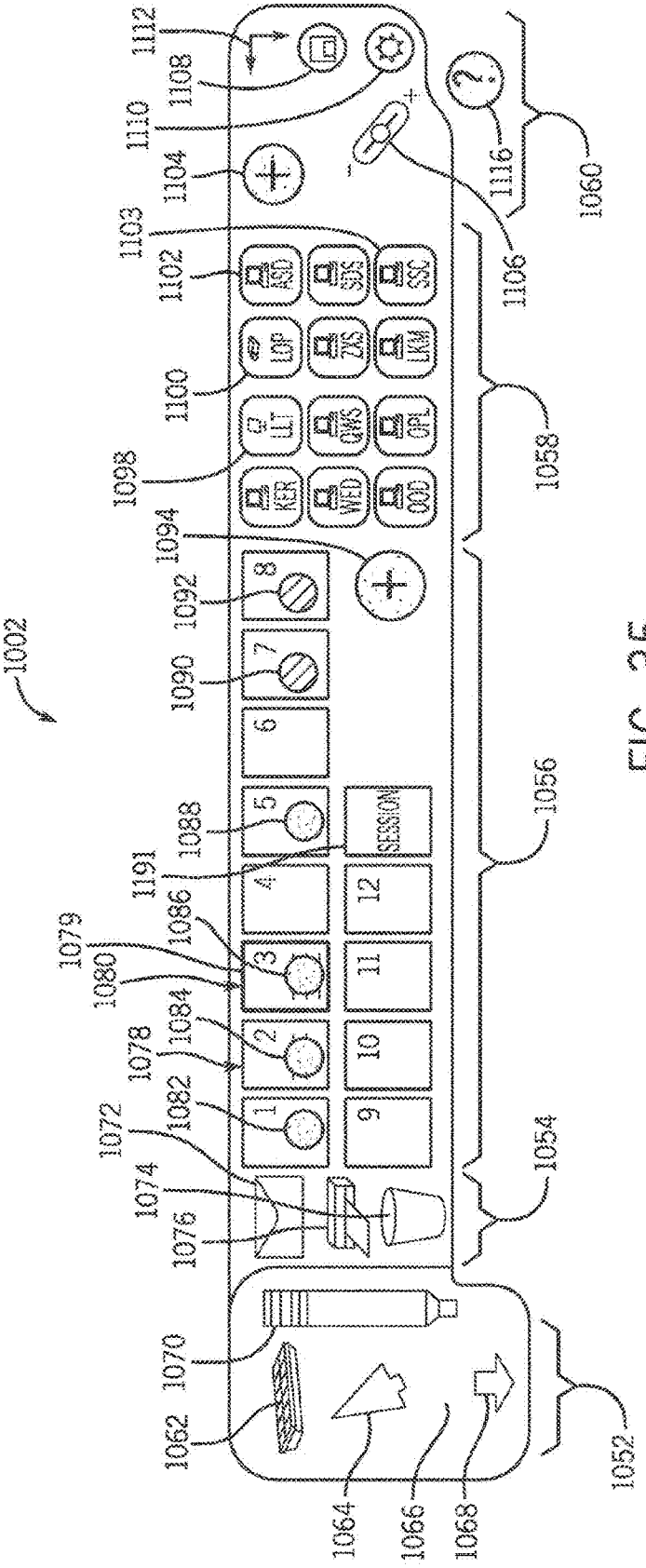
1002
1052
1054
1056
1058
1060
1062
1064
1066
1068
1070
1072
1074
1076
1078
1079
1080
1082
1084
1086
1088
1090
1092
1094
1098
1100
1102
1103
1104
1106
1108
1110
1112
1116
1191
SESSION
ASD
SDS
SSC
LDP
ZDS
LKM
LLT
DWS
DPL
KER
WED
ODD

FIG. 35

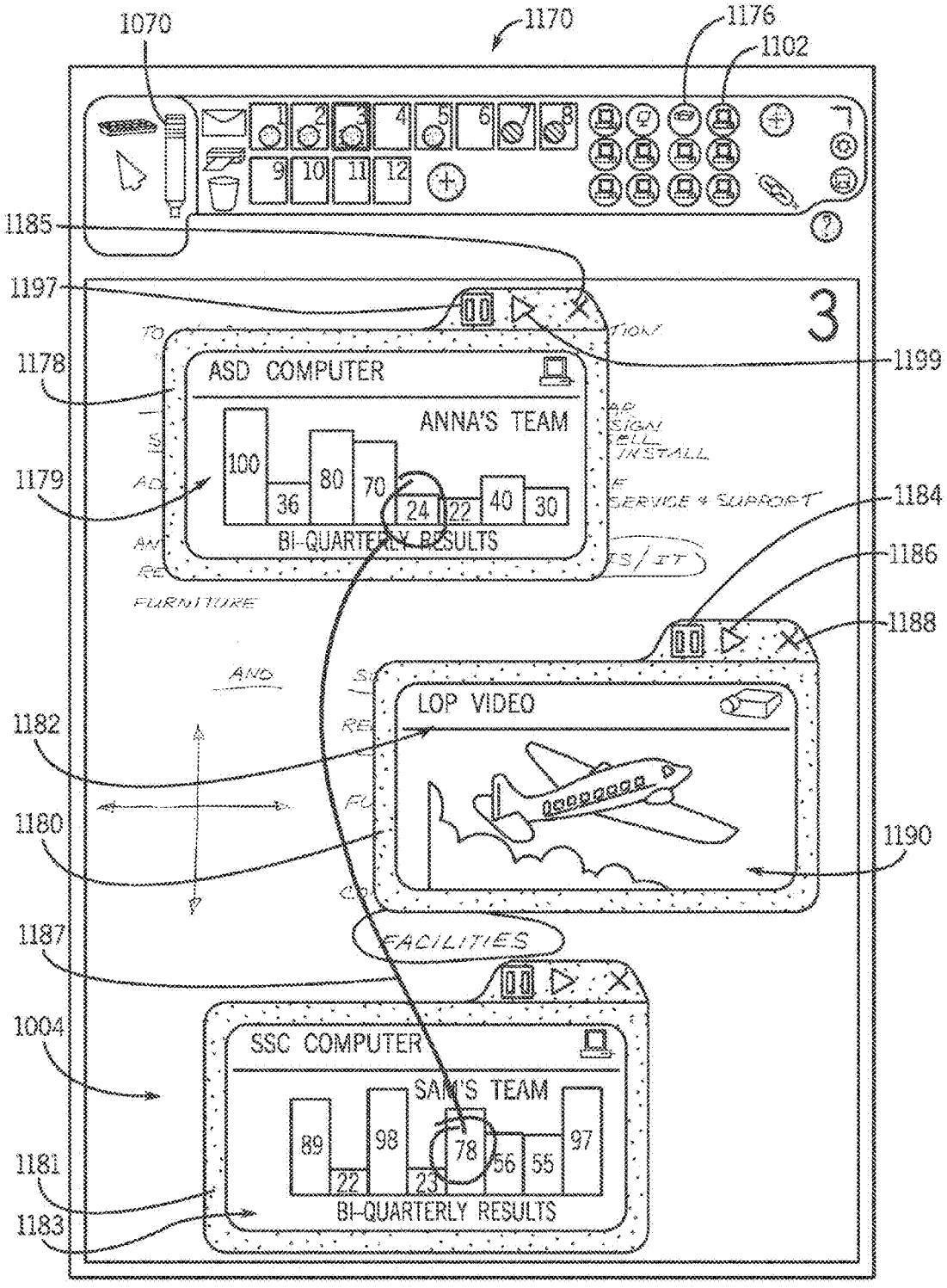
1070
1170
1176
1102
1185
1197
1199
1178
ASD COMPUTER
ANNA'S TEAM
100
36
80
70
24
22
40
30
BI-QUARTERLY RESULTS
1179
1184
1186
1188
LOP VIDEO
1182
1180
1190
FACILITIES
1187
1004
SSC COMPUTER
SAM'S TEAM
89
22
98
23
78
56
55
97
BI-QUARTERLY RESULTS
1181
1183

FIG. 36

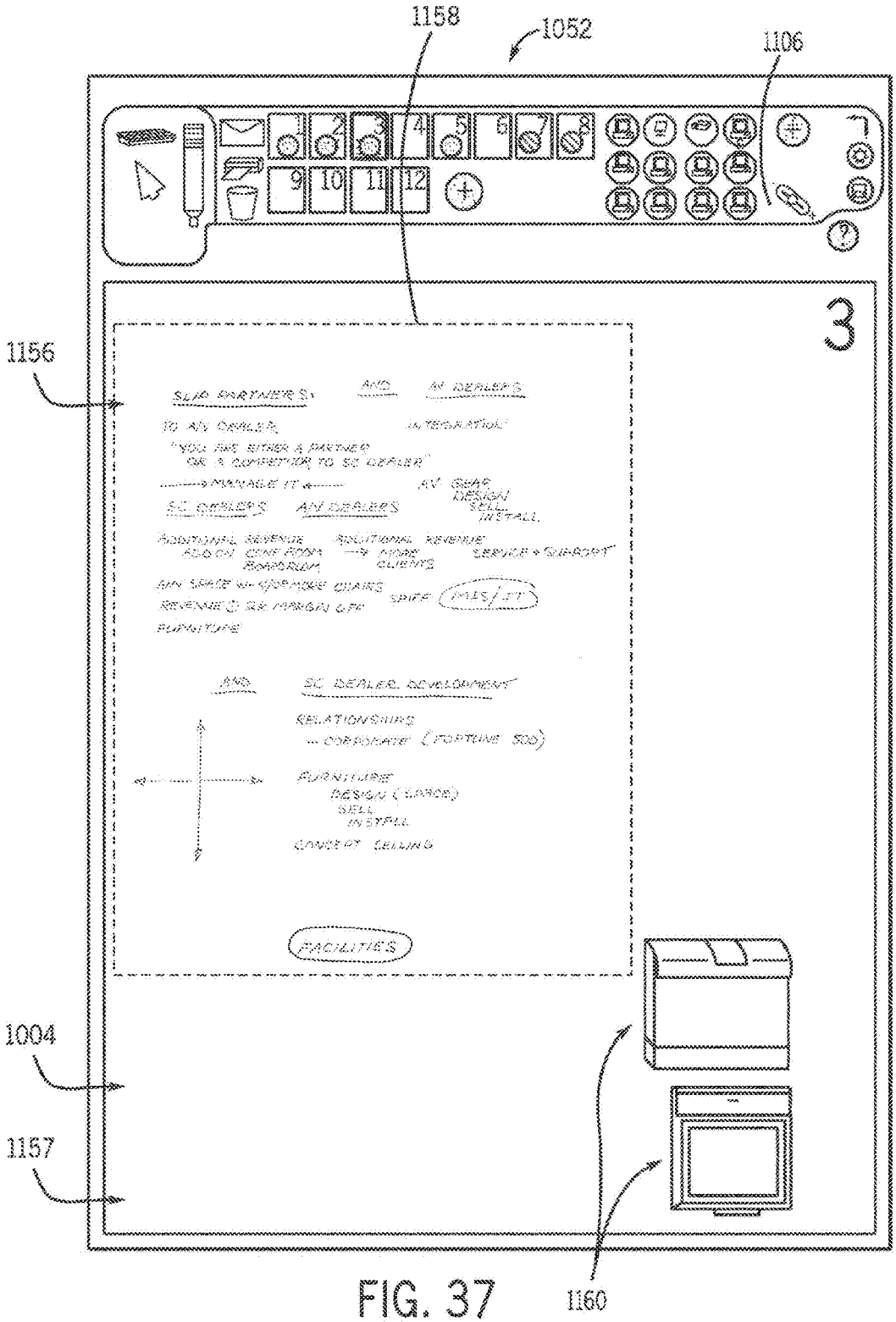
1158
1052
1106
1156
1004
1157
1160
3
SLAP PARTNERS
AND
AV DEALERS
TO AV DEALER
INTEGRATION
"YOU ARE EITHER A PARTNER OR A COMPETITOR TO SC DEALER"
MANAGE IT
AV GEAR
DESIGN
SELL
INSTALL
SC DEALERS
AV DEALERS
ADDITIONAL REVENUE
ADD-ON CONF ROOM
AUDITORIUM
ADDITIONAL REVENUE
MORE CLIENTS
SERVICE + SUPPORT
SPIFF
FURNITURE
AND
SC DEALER DEVELOPMENT
RELATIONSHIPS
CORPORATE (FORTUNE 500)
FURNITURE
DESIGN (LARGE)
SELL
INSTALL
CONCEPT SELLING
FACILITIES

FIG. 37

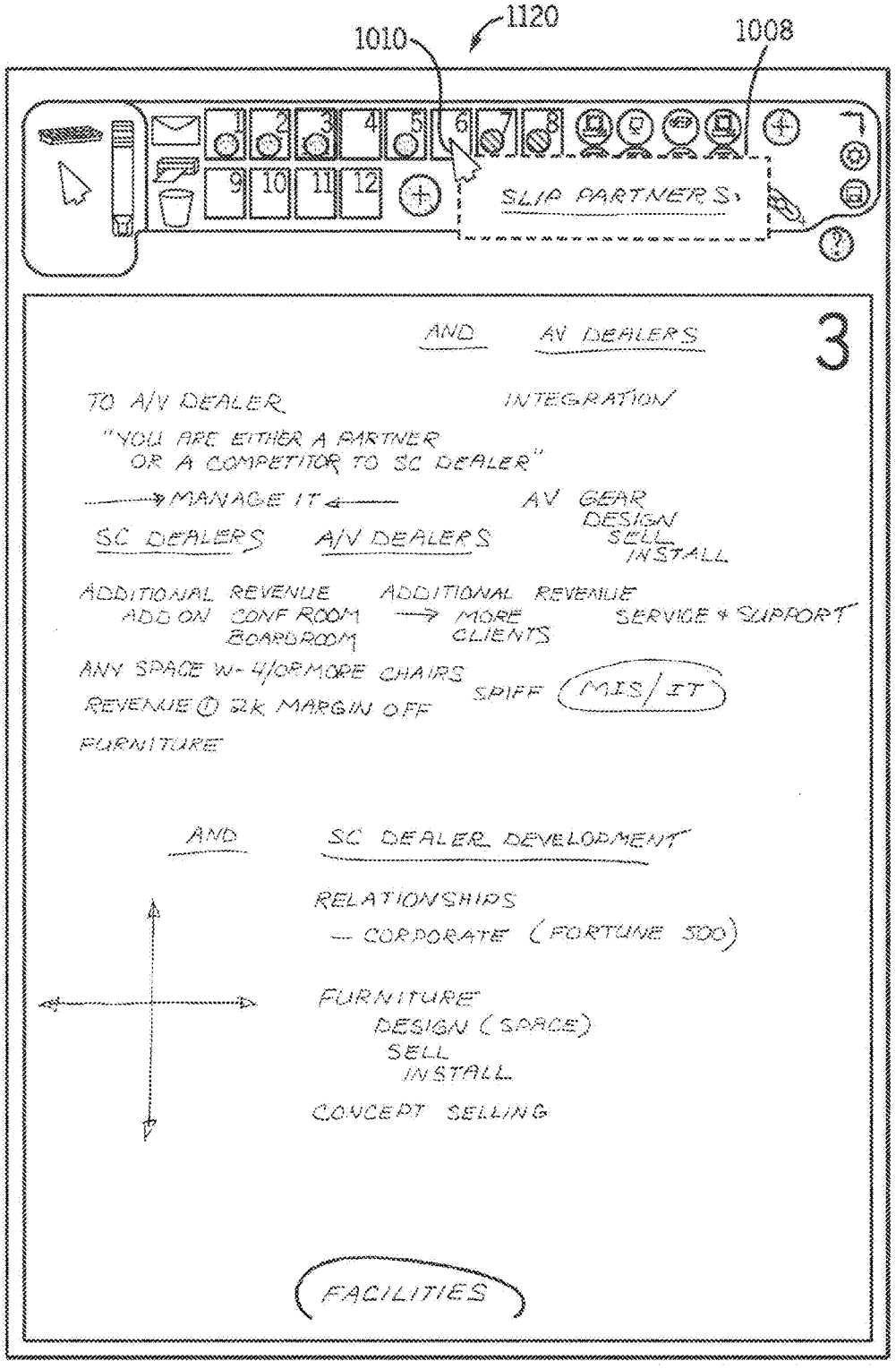
1010
1120
1008
SLIP PARTNERS
AND
AV DEALERS
3
TO A/V DEALER
INTEGRATION
"YOU ARE EITHER A PARTNER
OR A COMPETITOR TO SC DEALER"
MANAGE IT
AV GEAR
DESIGN
SELL
INSTALL
SC DEALERS
A/V DEALERS
ADDITIONAL REVENUE
ADD ON CONF ROOM
BOARDROOM
ADDITIONAL REVENUE
MORE
CLIENTS
SERVICE & SUPPORT
ANY SPACE W- 4/OR MORE CHAIRS
REVENUE @ 2K MARGIN OFF
FURNITURE
SPIFF
MIS/IT
AND
SC DEALER DEVELOPMENT
RELATIONSHIPS
— CORPORATE (FORTUNE 500)
FURNITURE
DESIGN (SPACE)
SELL
INSTALL
CONCEPT SELLING
FACILITIES

FIG. 38

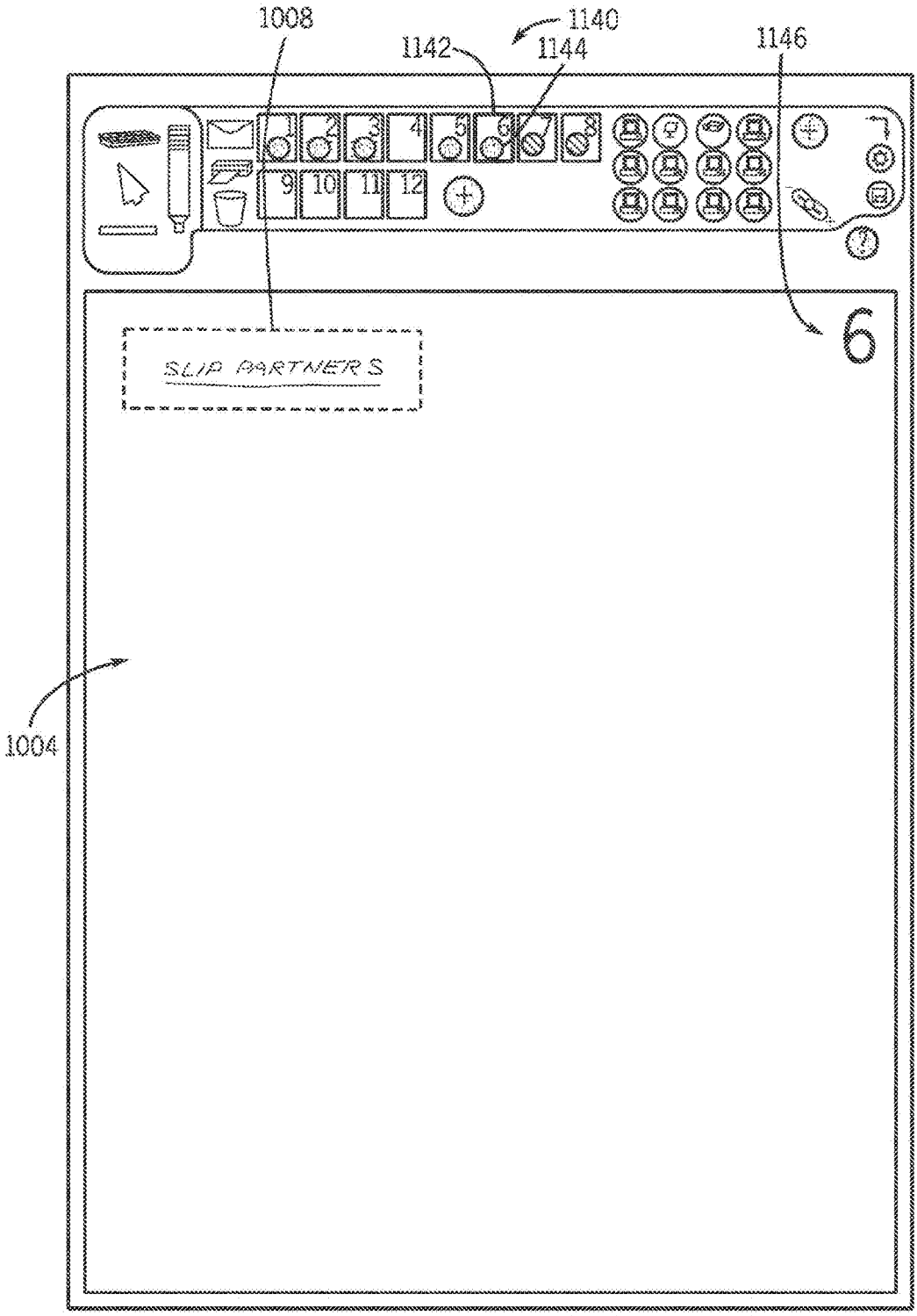

FIG. 39

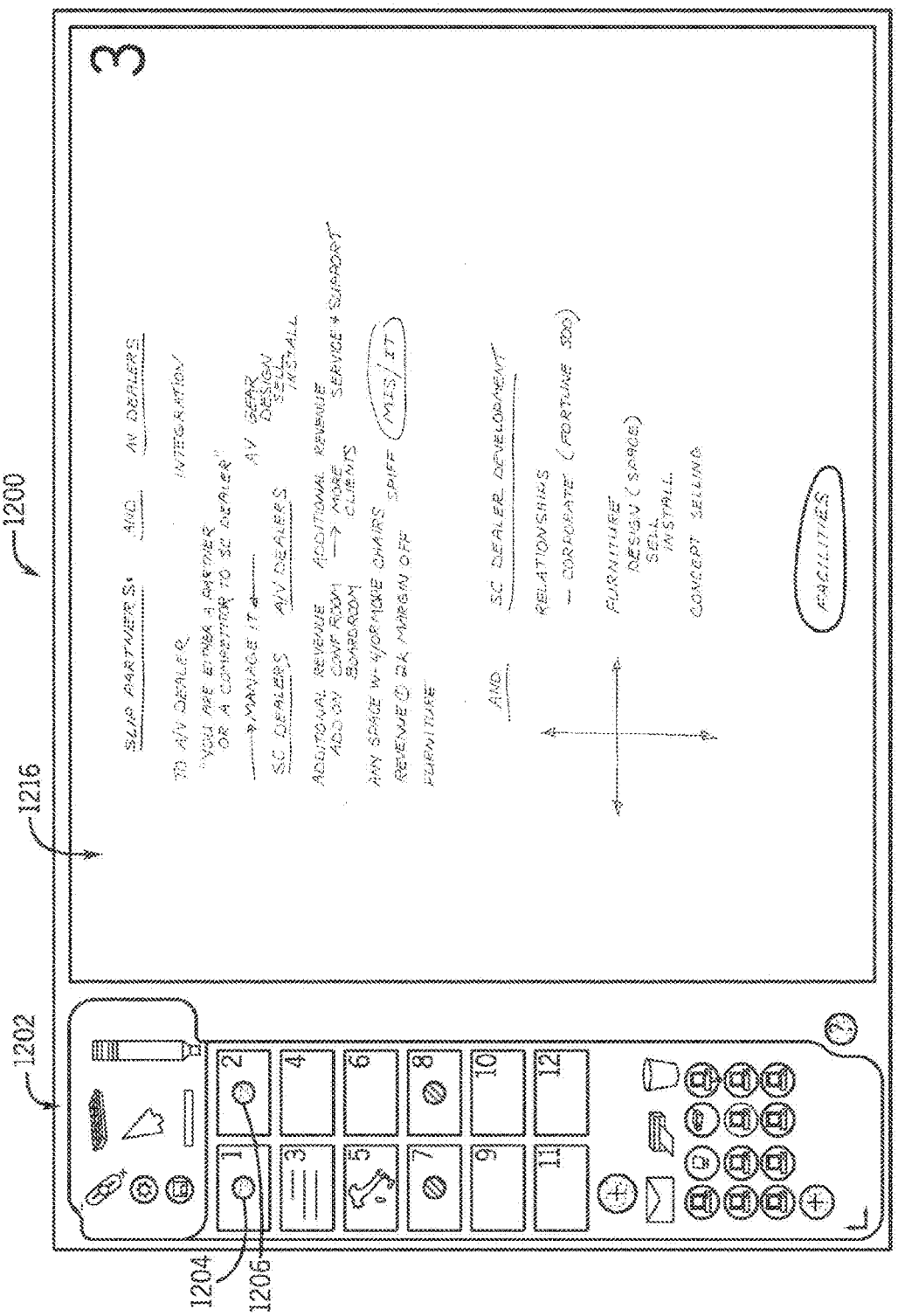
1200
1216
1202
1204
1206
3
SLAB PARTNERS
AND
AV DEALERS
TO AV DEALER
"YOU ARE EITHER A PARTNER OR A COMPETITOR TO SC DEALER"
INTEGRATION
MANAGE IT
AV
GEAR
DESIGN
SELL
INSTALL
SC DEALERS
AV DEALERS
ADDITIONAL REVENUE
ADD'L CONF ROOM
BOARDROOM
MORE CLIENTS
SERVICE + SUPPORT
ANY SPACE W/ W/ORMOVIE CHAIRS
SPIFF
(MES/IT)
REVENUE @ 2X MARGIN OFF
FURNITURE
AND
SC DEALER DEVELOPMENT
RELATIONSHIPS
— CORPORATE (FORTUNE 500)
FURNITURE
DESIGN (SPACE)
SELL
INSTALL
CONCEPT SELLING
FACILITIES

FIG. 40

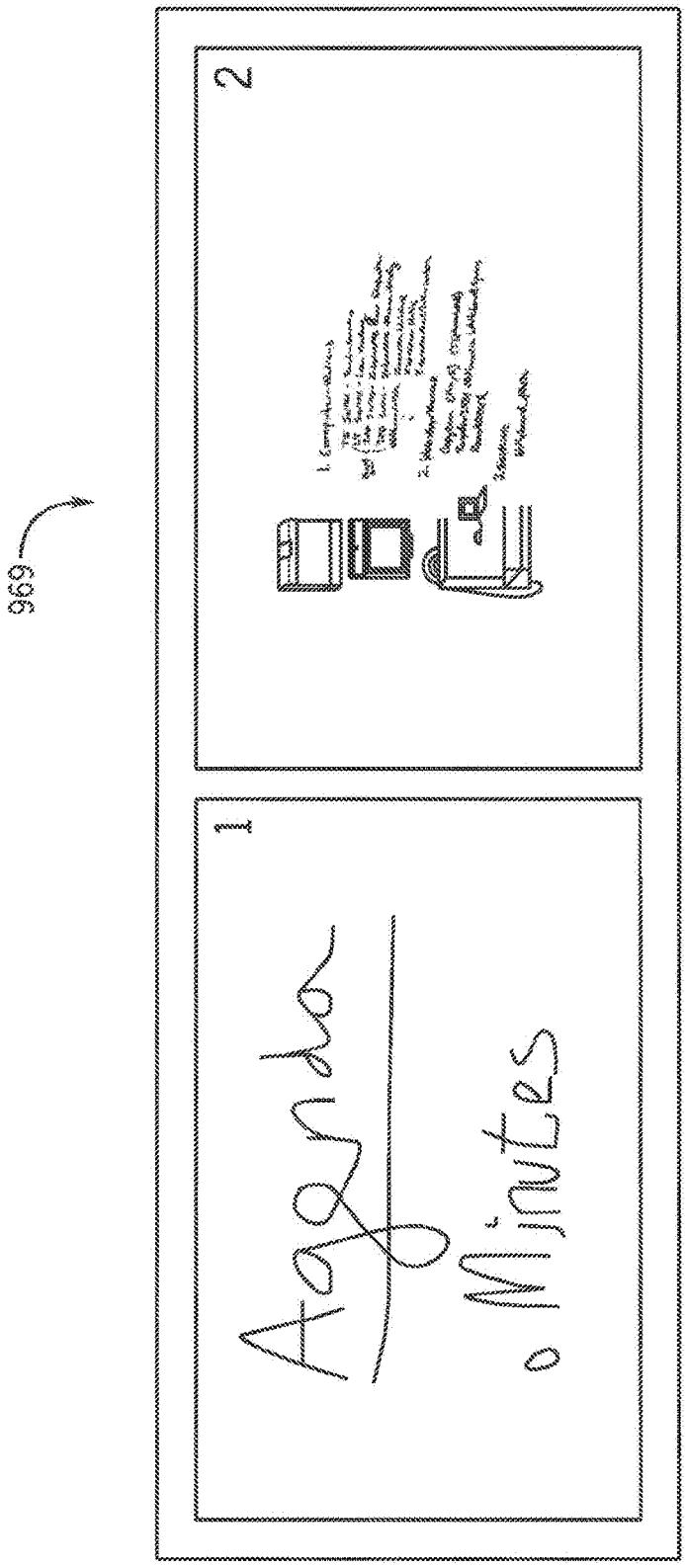

FIG. 41

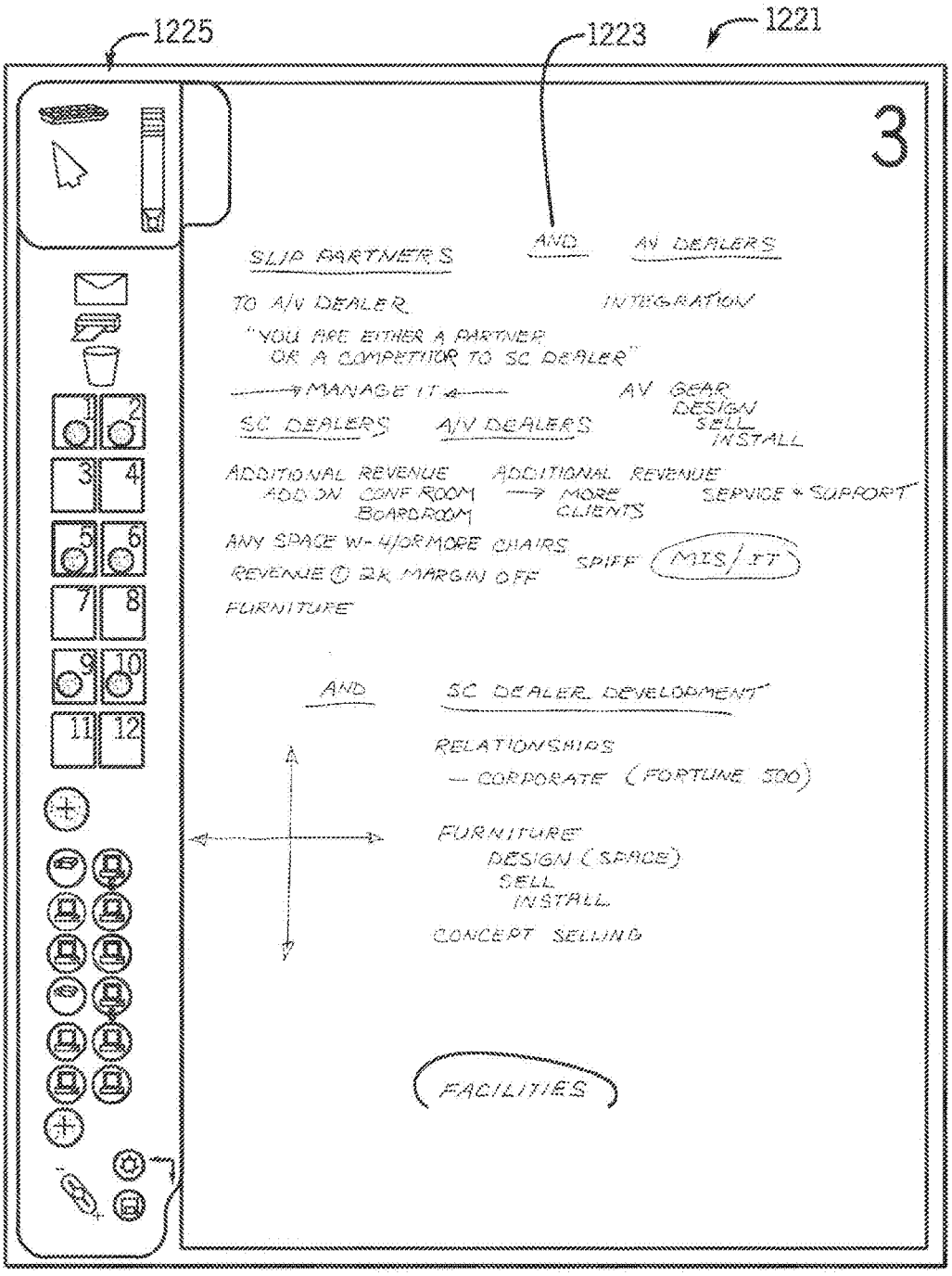
1225
1223
1221
3
SLIP PARTNERS
AND
AV DEALERS
TO A/V DEALER
INTEGRATION
"YOU ARE EITHER A PARTNER OR A COMPETITOR TO SC DEALER"
MANAGE IT
AV GEAR
DESIGN
SELL
INSTALL
SC DEALERS
A/V DEALERS
ADDITIONAL REVENUE ADD ON CONF ROOM BOARDROOM
ADDITIONAL REVENUE MORE CLIENTS
SERVICE & SUPPORT
ANY SPACE W- 4/OR MORE CHAIRS
REVENUE @ 2K MARGIN OFF
FURNITURE
SPIFF
MIS/IT
AND
SC DEALER DEVELOPMENT
RELATIONSHIPS
— CORPORATE (FORTUNE 500)
FURNITURE
DESIGN (SPACE)
SELL
INSTALL
CONCEPT SELLING
FACILITIES

FIG. 42

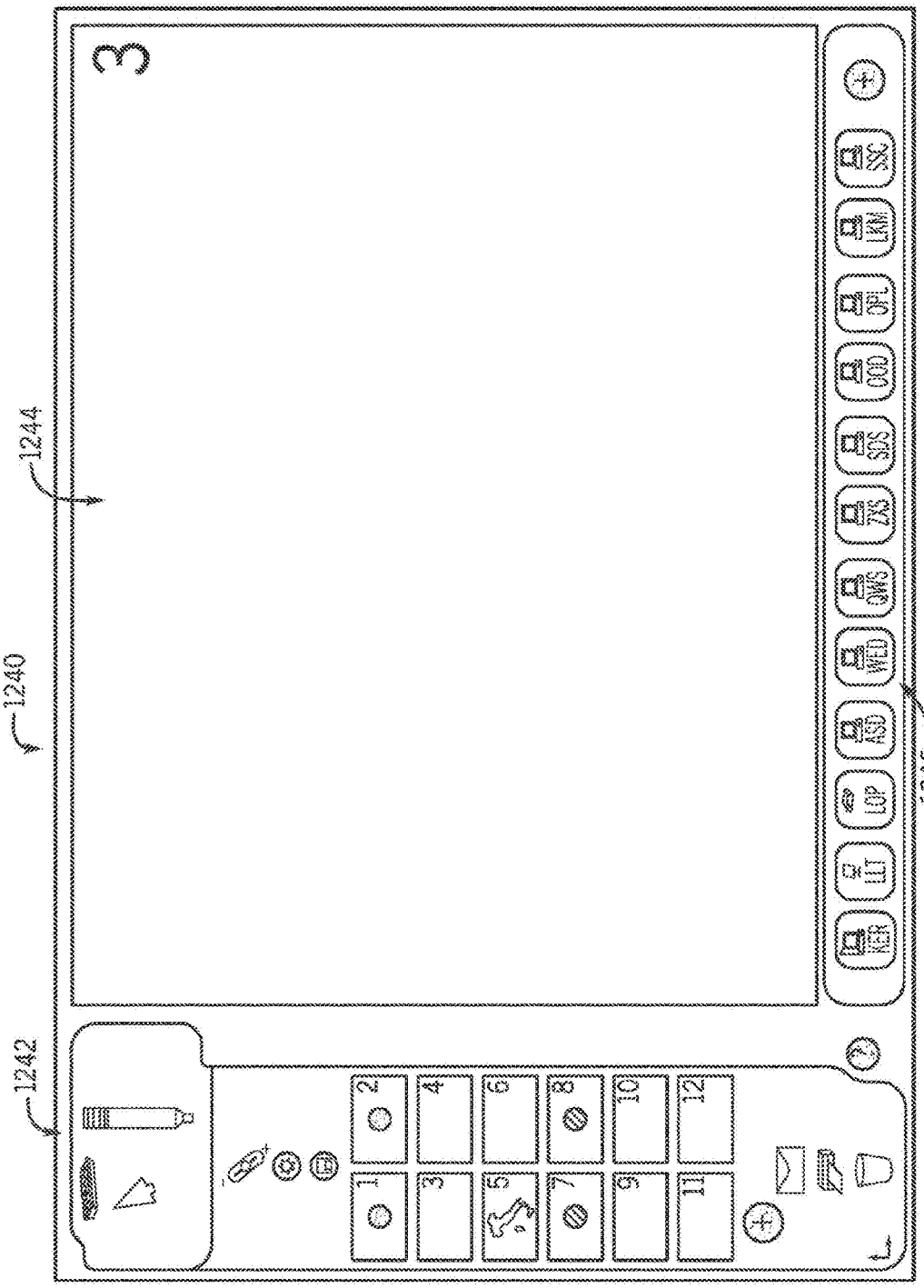
1240
1242
1244
1246
3
KER
LLT
LOP
ASD
WED
QWS
ZXS
SDS
OOD
OPL
LKM
SSC
1
2
3
4
5
6
7
8
9
10
11
12

FIG. 43

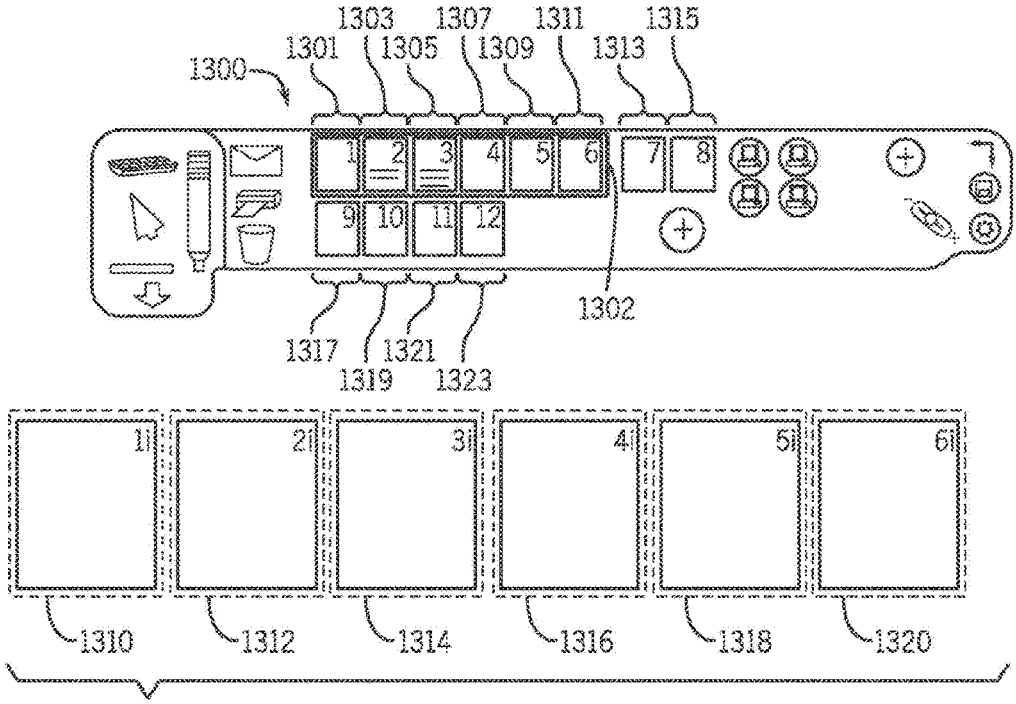
1300
1301
1303
1305
1307
1309
1311
1313
1315
1302
1317
1319
1321
1323
1310
1312
1314
1316
1318
1320

FIG. 44

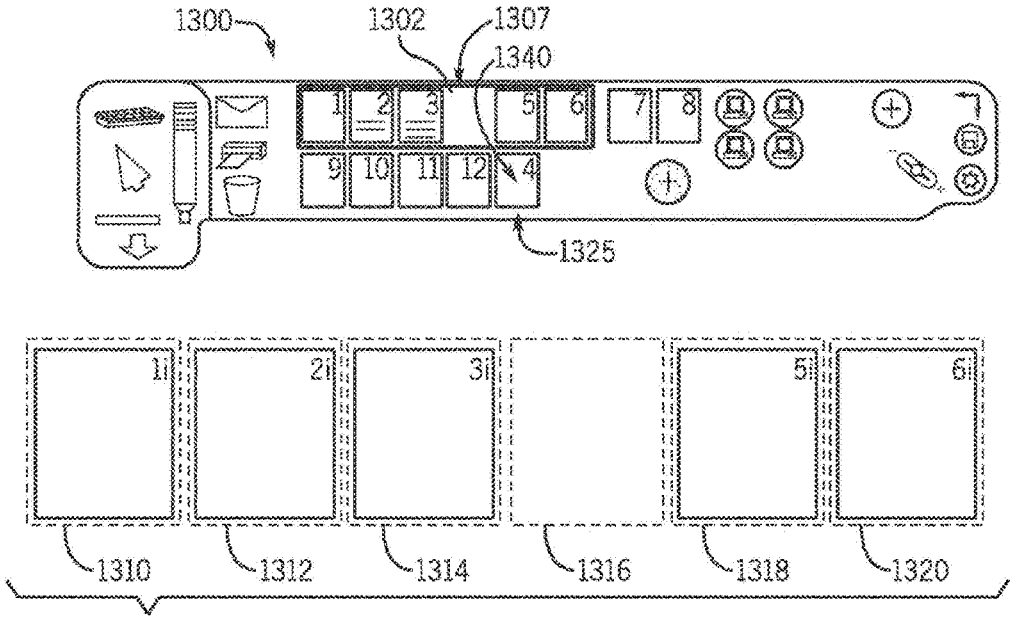
1300
1302
1307
1340
1325
1310
1312
1314
1316
1318
1320

FIG. 45

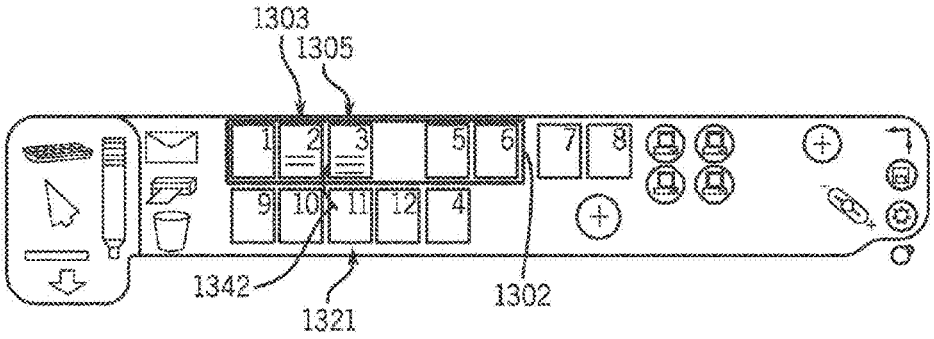
1303
1305
1342
1321
1302

FIG. 46

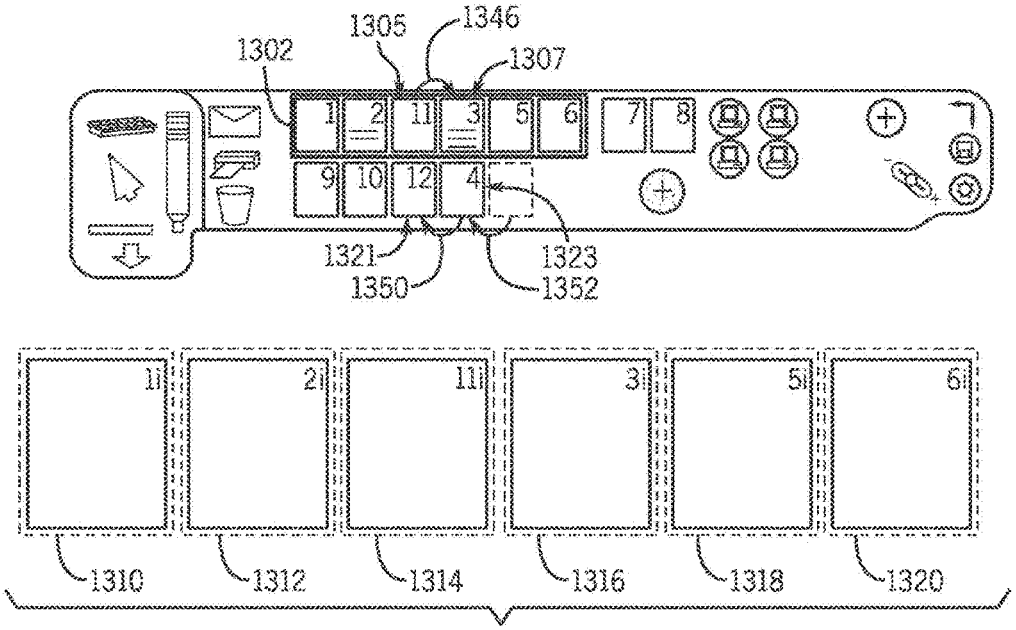
1306
1346
1302
1307
1321
1350
1323
1352
1310
1312
1314
1316
1318
1320

FIG. 47

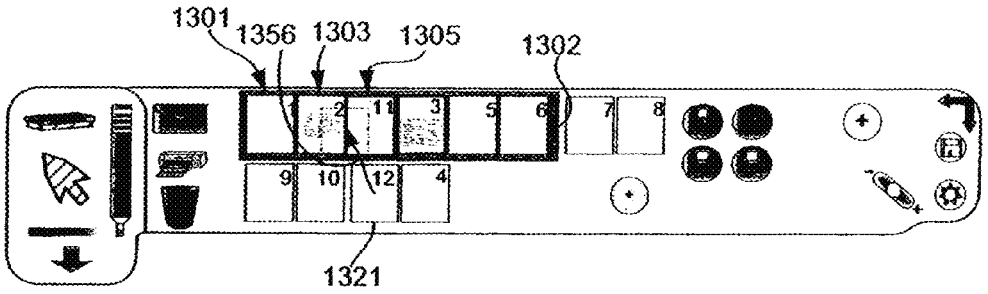
1301
1356
1303
1305
1302
1321

Fig. 48

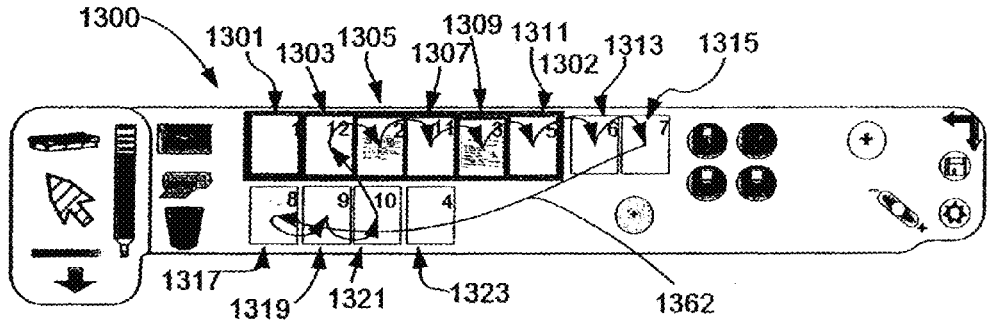
1300
1301
1303
1305
1307
1309
1311
1302
1313
1315
1317
1319
1321
1323
1362

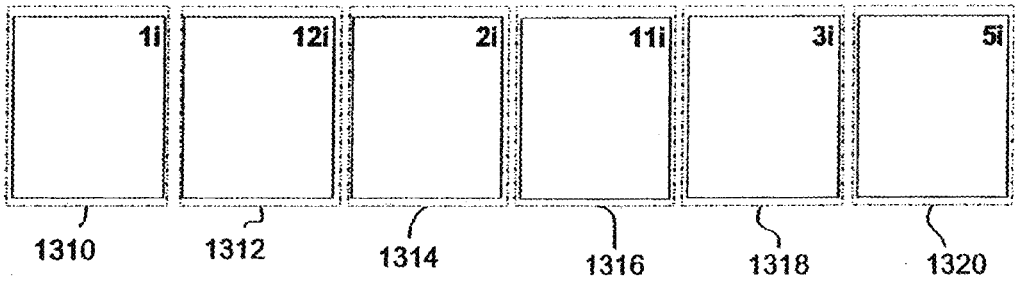
1i
12i
2i
11i
3i
5i
1310
1312
1314
1316
1318
1320

Fig. 49

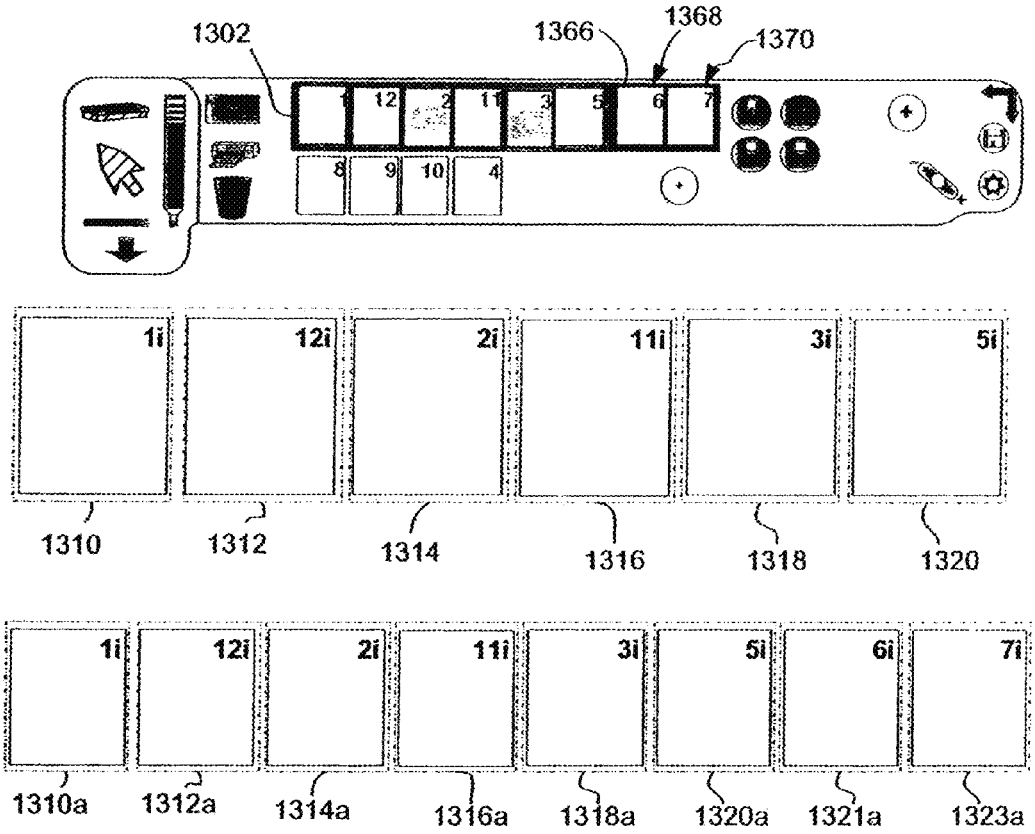
1302
1366
1368
1370
1i
12i
2i
11i
3i
5i
1310
1312
1314
1316
1318
1320
1i
12i
2i
11i
3i
5i
6i
7i
1310a
1312a
1314a
1316a
1318a
1320a
1321a
1323a

Fig. 50

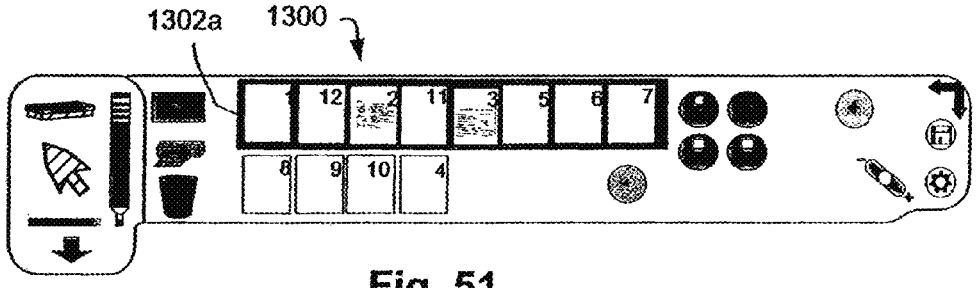
1302a
1300

Fig. 51

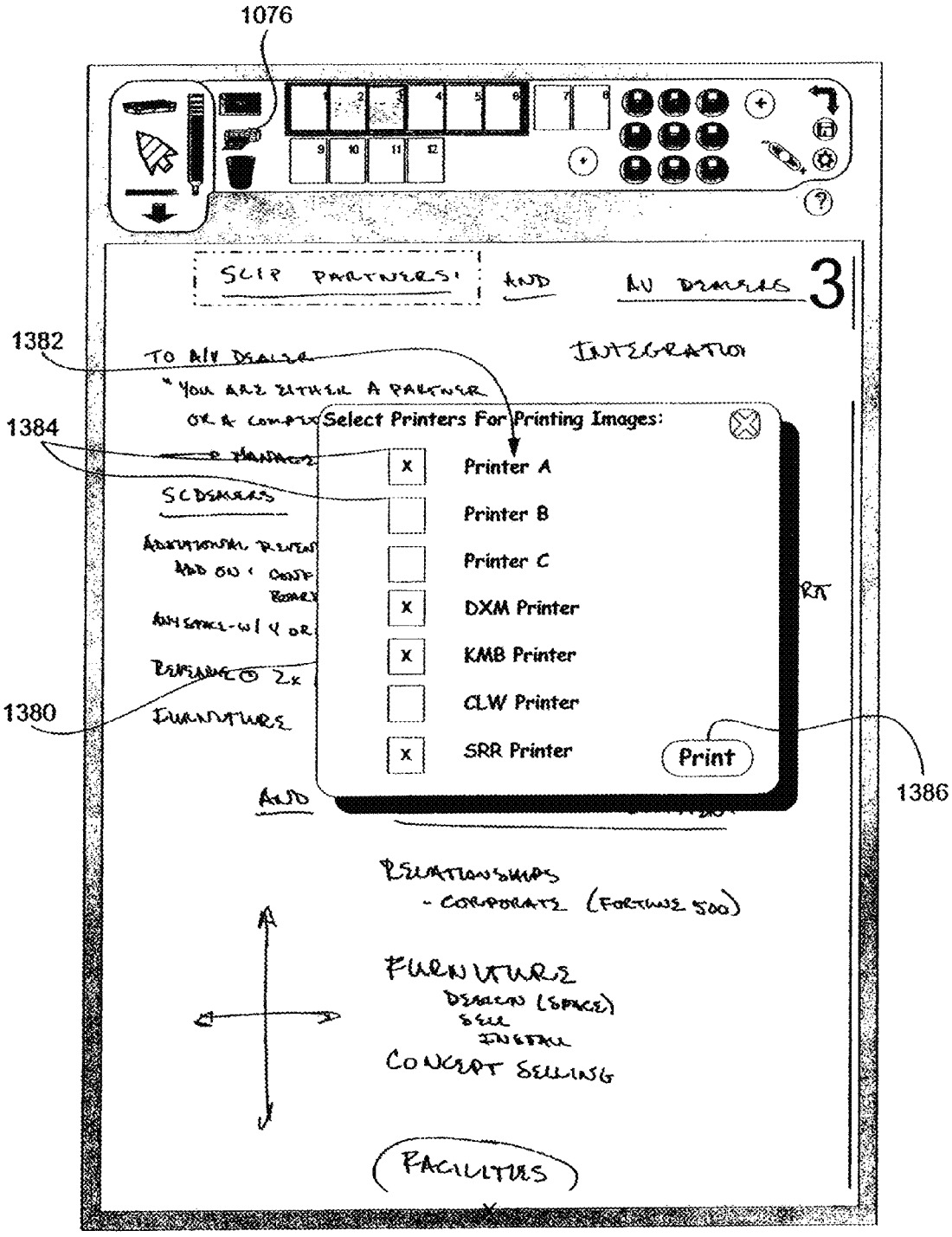
1076
1382
1384
1380
1386
Select Printers For Printing Images:
Printer A
Printer B
Printer C
DXM Printer
KMB Printer
CLW Printer
SRR Printer
Print
INTEGRATION
FURNITURE
CONCEPT SELLING
FACILITIES

Fig. 52

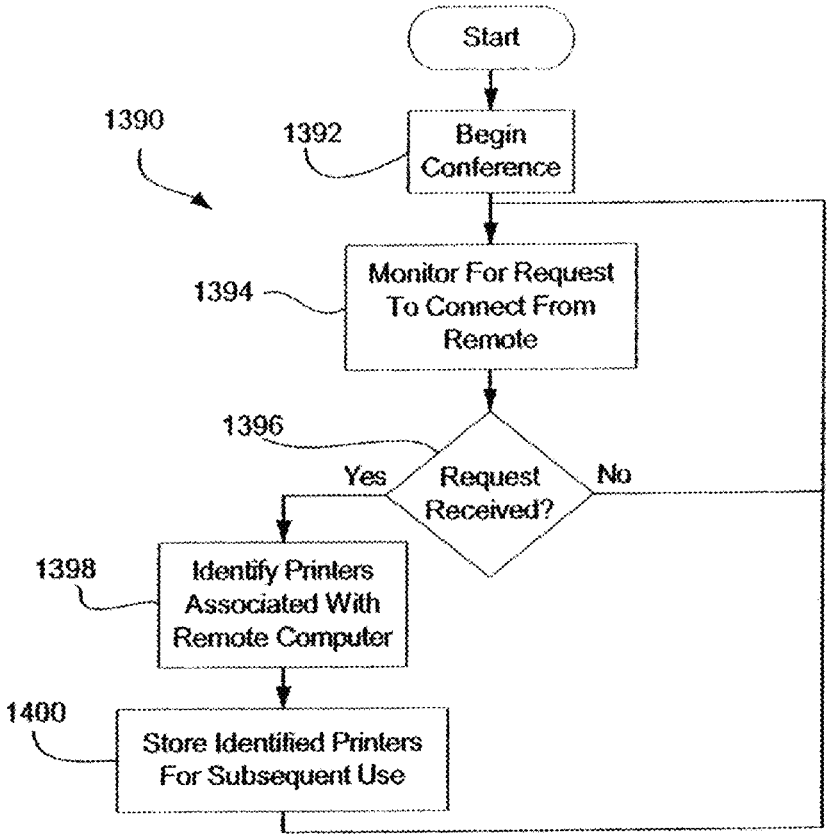
Start
1390
1392
Begin Conference
1394
Monitor For Request To Connect From Remote
1396
Request Received?
Yes
No
1398
Identify Printers Associated With Remote Computer
1400
Store Identified Printers For Subsequent Use

Fig. 53

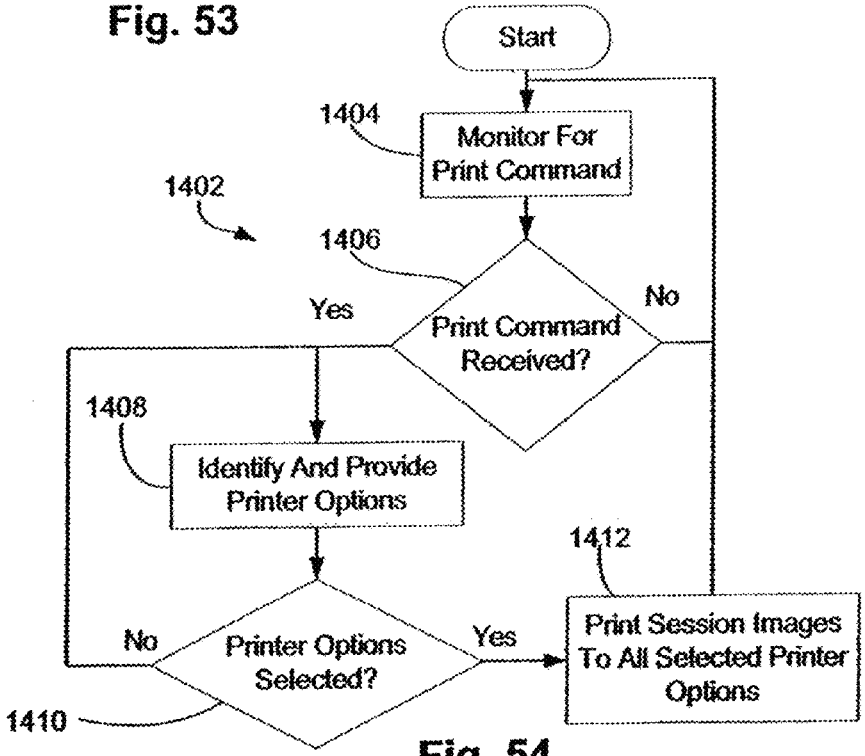
Start
1404
Monitor For Print Command
1402
1406
Print Command Received?
Yes
No
1408
Identify And Provide Printer Options
1412
Print Session Images To All Selected Printer Options
Printer Options Selected?
No
Yes
1410

Fig. 54

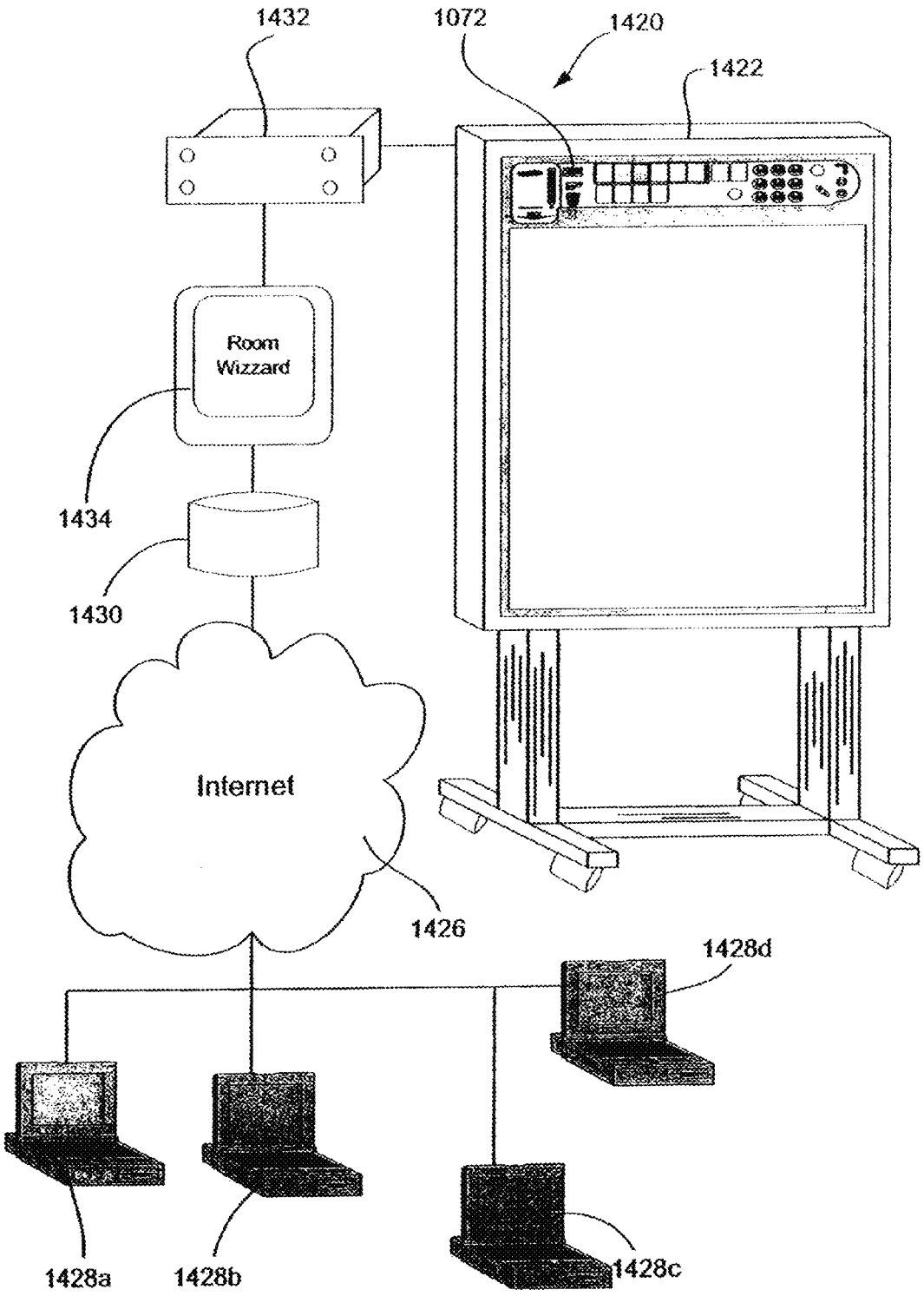
1432
1072
1420
1422
Room Wizzard
1434
1430
Internet
1426
1428d
1428a
1428b
1428c

Fig. 55

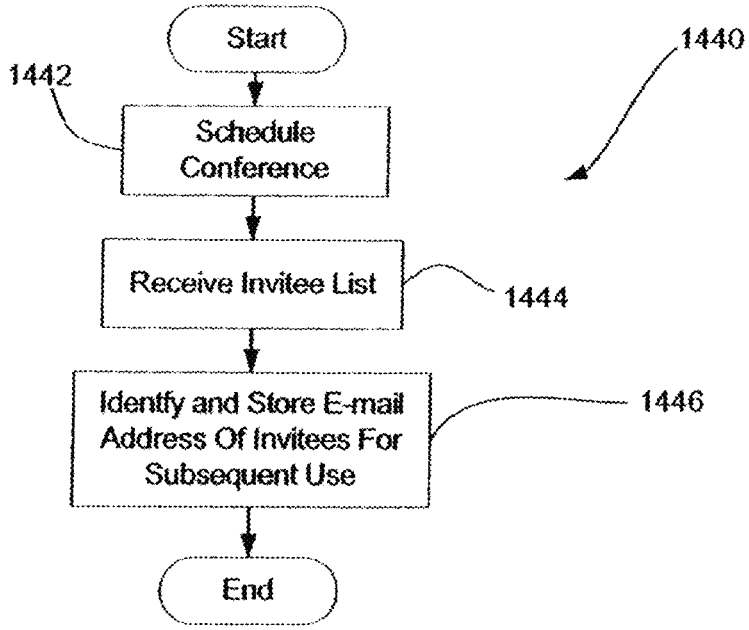
Start
1442
Schedule Conference
1440
Receive Invitee List
1444
Identfy and Store E-mail Address Of Invitees For Subsequent Use
1446
End

Fig. 56

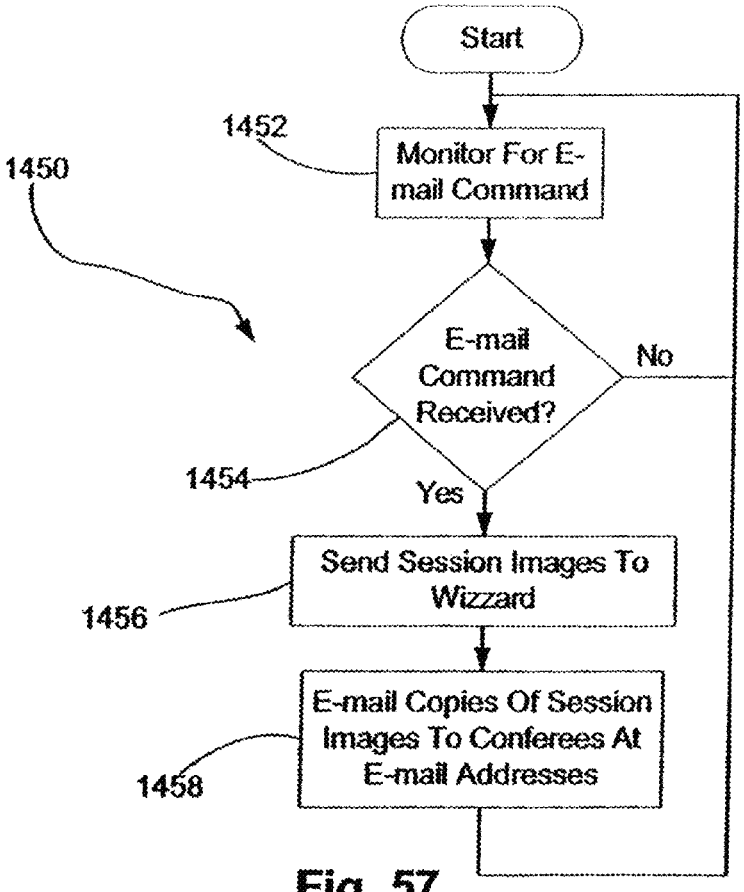
Start
1452
Monitor For E-mail Command
1450
E-mail Command Received?
No
1454
Yes
Send Session Images To Wizzard
1456
E-mail Copies Of Session Images To Conferees At E-mail Addresses
1458

Fig. 57

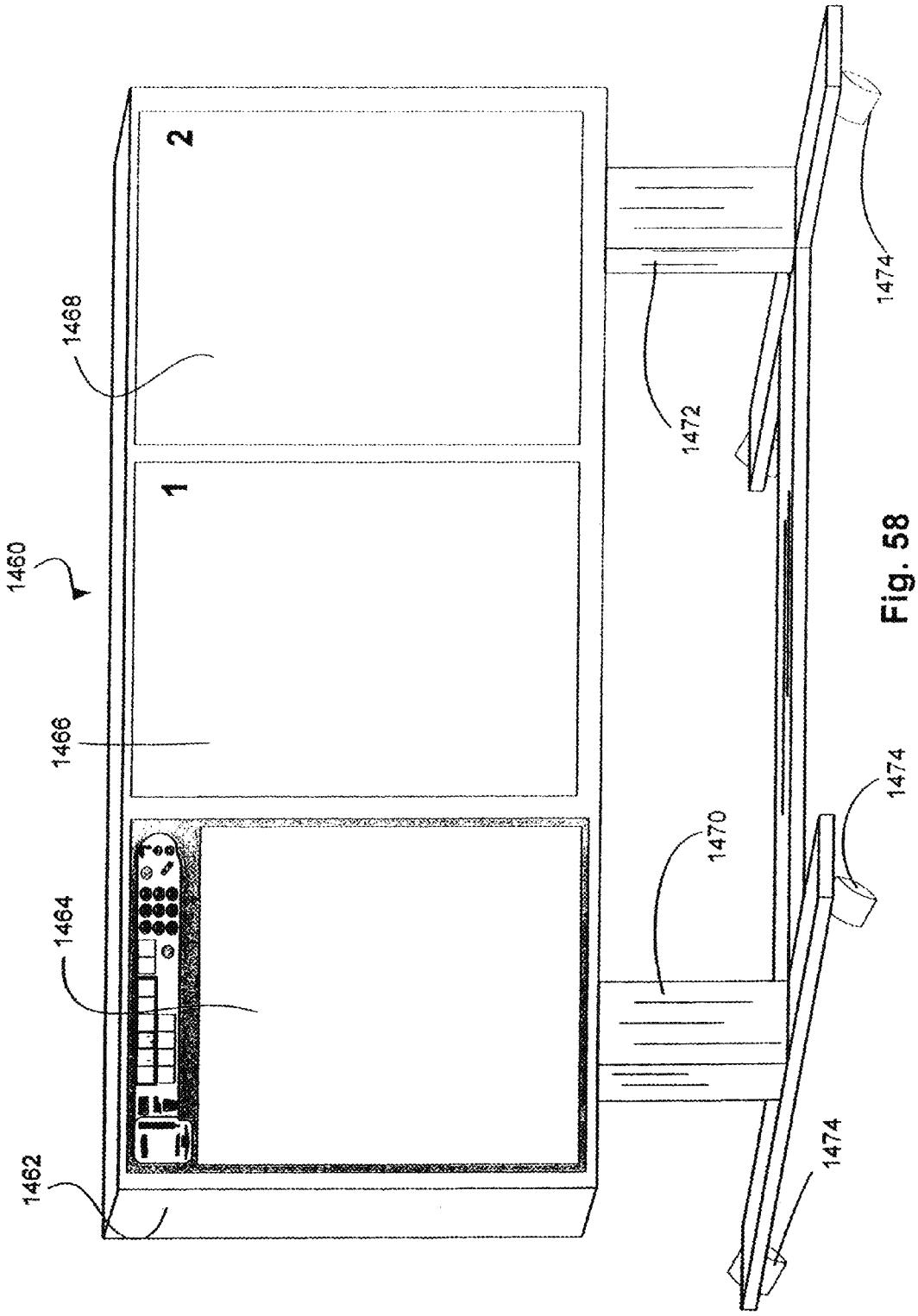

Fig. 58

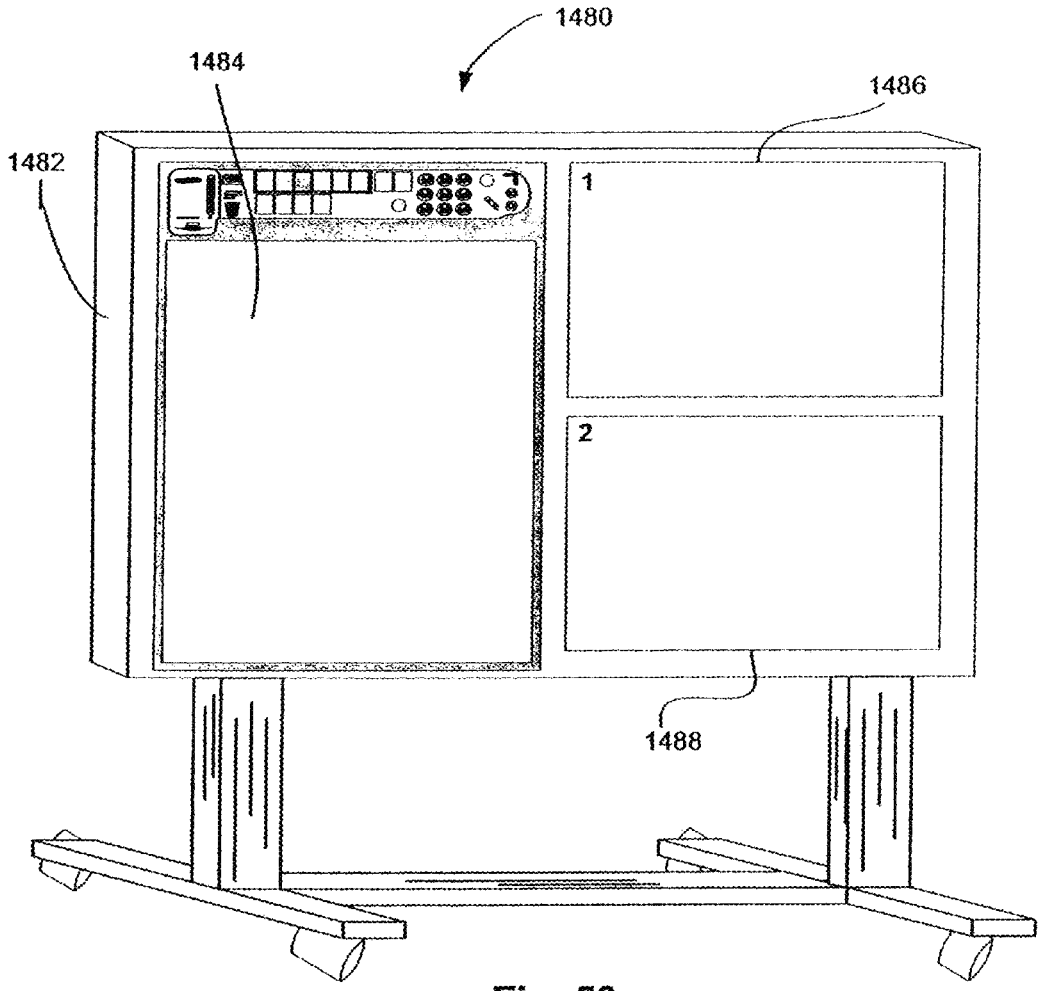

Fig. 59

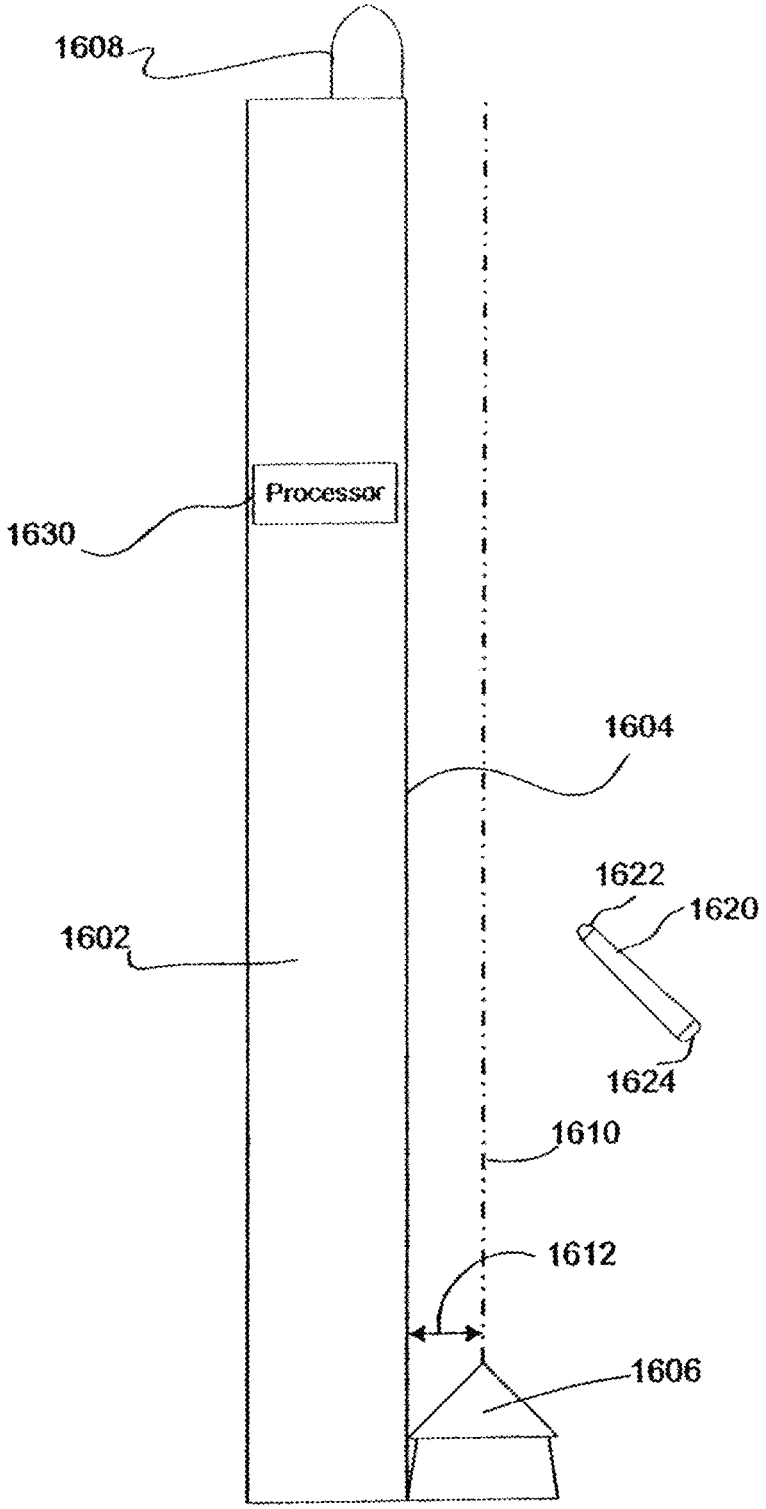

Fig. 60

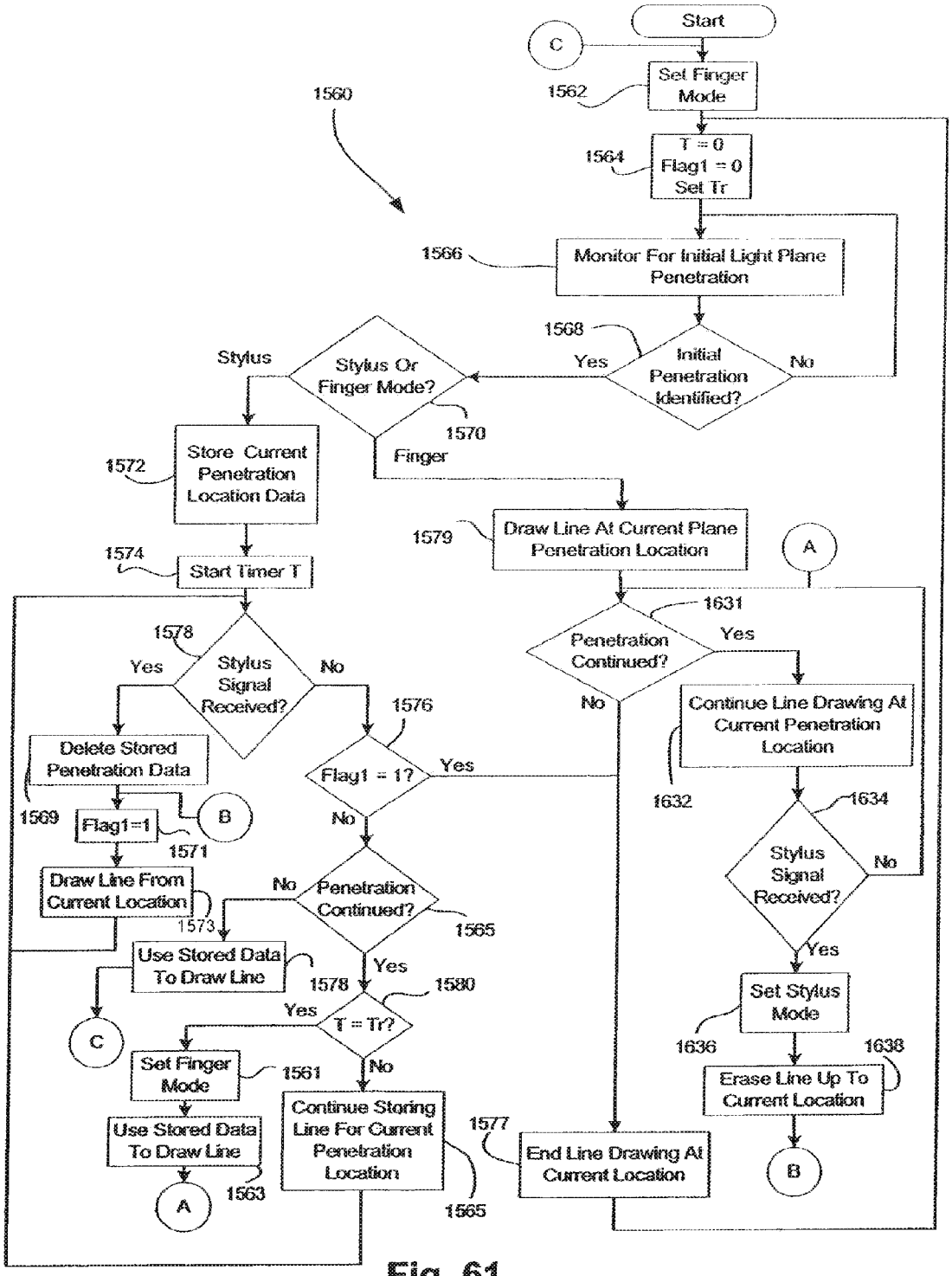
Start
C
Set Finger Mode
1562
1560
T = 0
Flag1 = 0
Set Tr
1564
Monitor For Initial Light Plane Penetration
1566
Initial Penetration Identified?
1568
Yes
No
Stylus Or Finger Mode?
1570
Stylus
Finger
Store Current Penetration Location Data
1572
Start Timer T
1574
Draw Line At Current Plane Penetration Location
1579
A
Penetration Continued?
1631
Yes
No
Continue Line Drawing At Current Penetration Location
1632
Stylus Signal Received?
1634
No
Yes
Set Stylus Mode
1636
Erase Line Up To Current Location
1638
B
End Line Drawing At Current Location
1577
Stylus Signal Received?
1578
Yes
No
Delete Stored Penetration Data
1569
Flag1=1
1571
B
Flag1 = 1?
1576
Yes
No
Draw Line From Current Location
1573
Penetration Continued?
1565
No
Yes
Use Stored Data To Draw Line
1578
T = Tr?
1580
Yes
No
C
Set Finger Mode
1561
Use Stored Data To Draw Line
1563
A
Continue Storing Line For Current Penetration Location
1565

Fig. 61

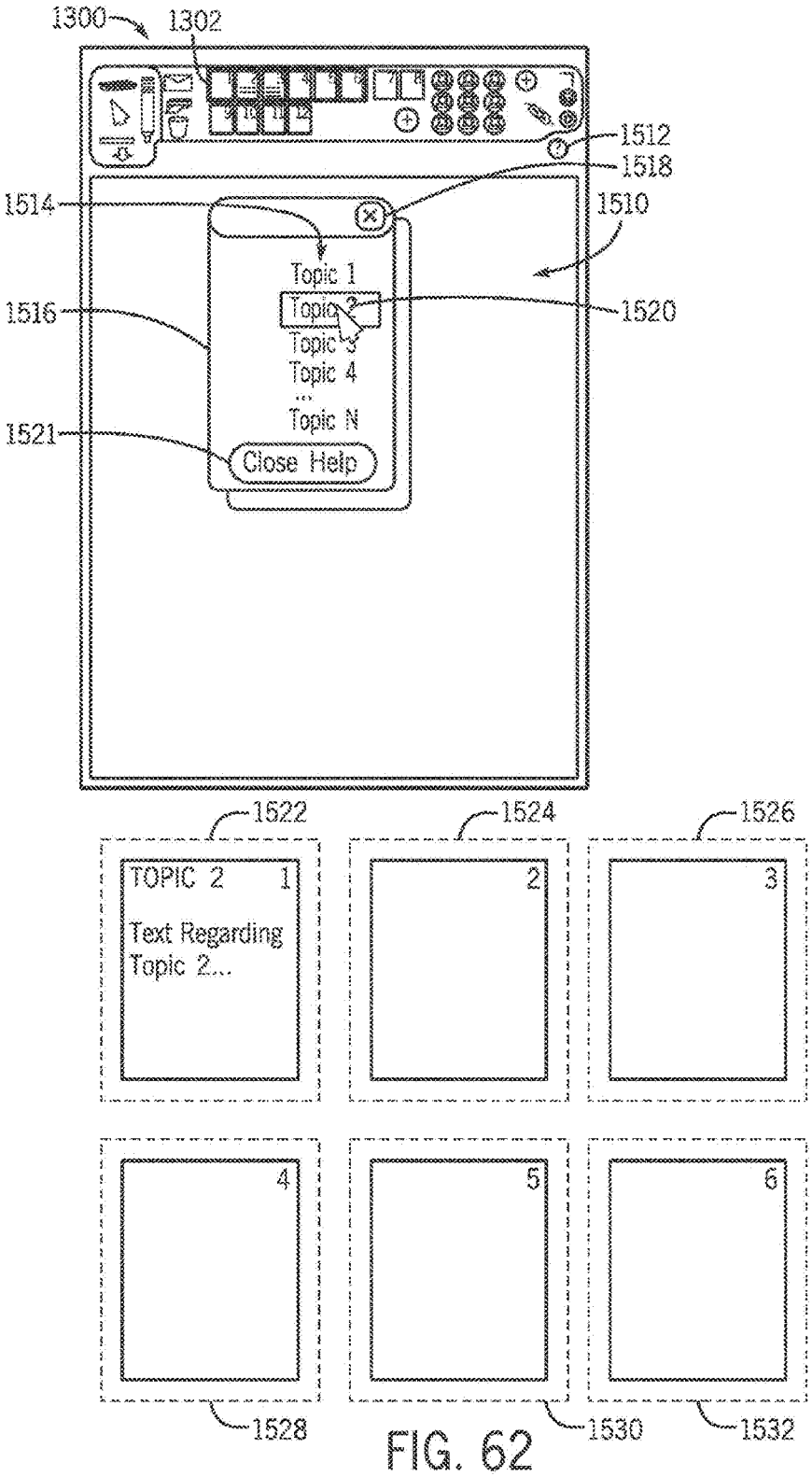
1300
1302
1512
1518
1514
1510
Topic 1
Topic 2
Topic 3
Topic 4
...
Topic N
1516
1520
1521
Close Help
1522
1524
1526
TOPIC 2 1
Text Regarding Topic 2...
2
3
4
5
6
1528
1530
1532

FIG. 62

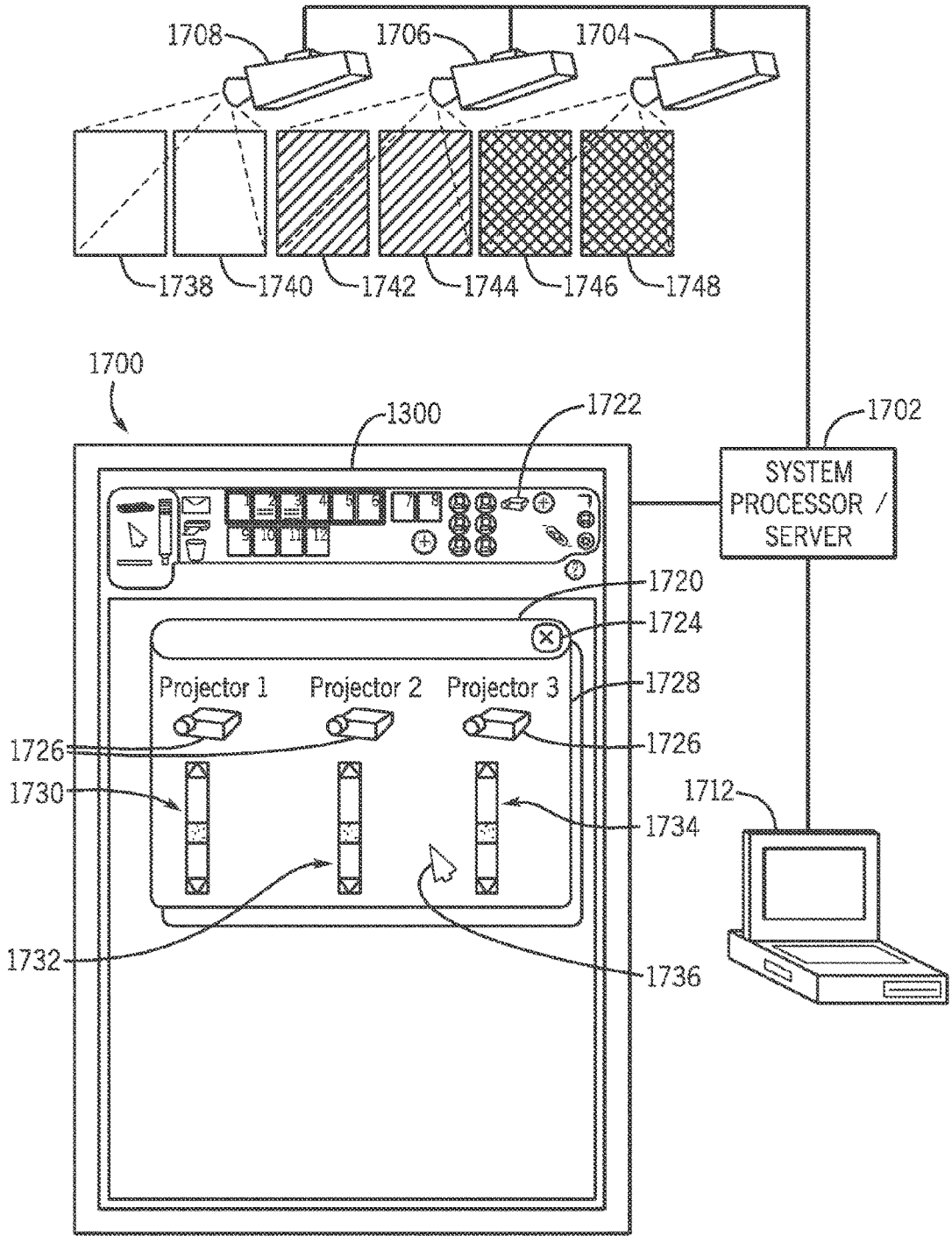
1708
1706
1704
1738
1740
1742
1744
1746
1748
1700
1300
1722
1702
SYSTEM PROCESSOR / SERVER
1720
1724
Projector 1
Projector 2
Projector 3
1728
1726
1726
1730
1712
1734
1732
1736

FIG. 63

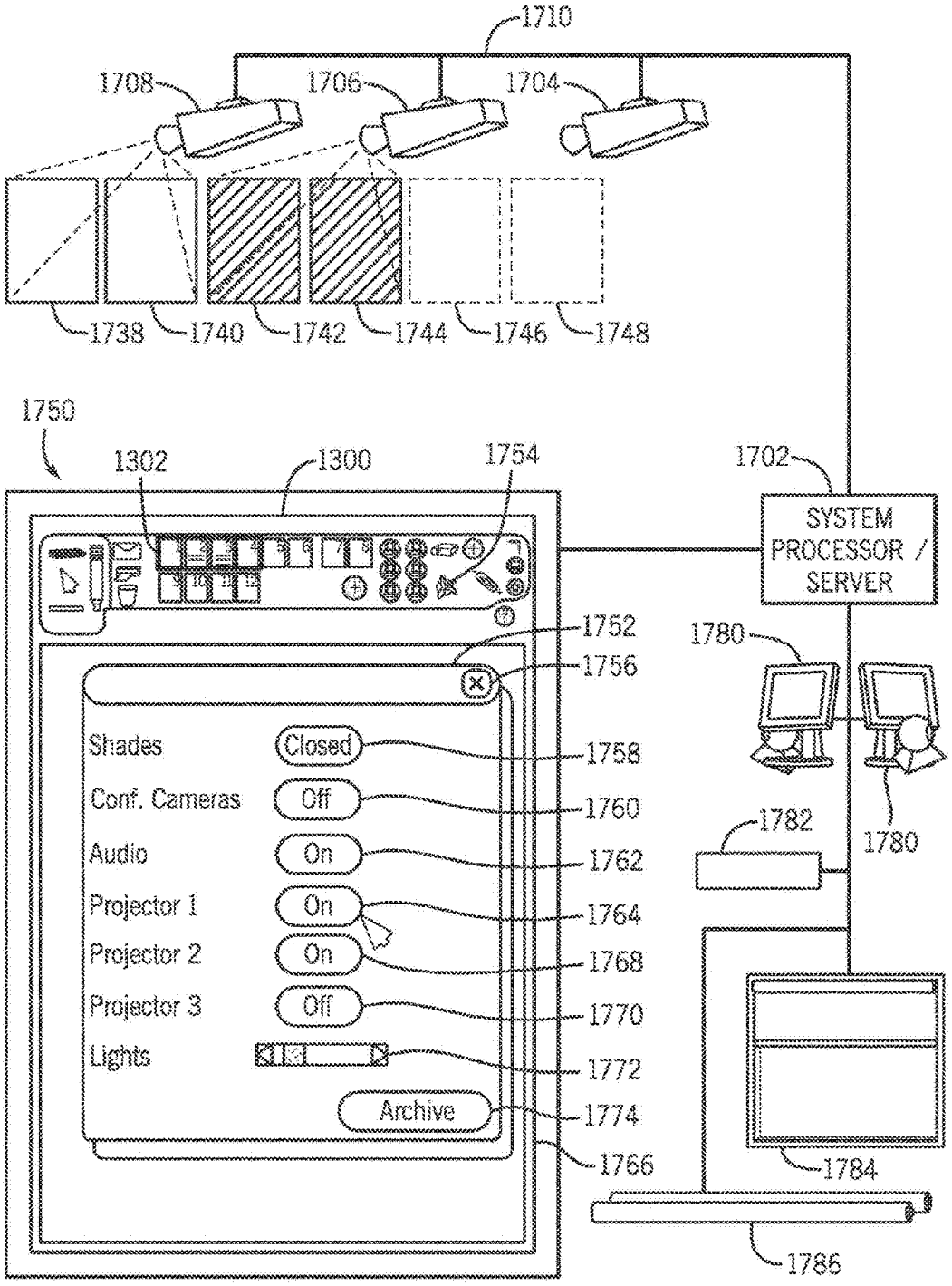
1710
1708
1706
1704
1738
1740
1742
1744
1746
1748
1750
1302
1300
1754
1702
SYSTEM PROCESSOR / SERVER
1752
1756
1780
Shades
Closed
1758
Conf. Cameras
Off
1760
Audio
On
1762
1782
1780
Projector 1
On
1764
Projector 2
On
1768
Projector 3
Off
1770
Lights
1772
Archive
1774
1766
1784
1786

FIG. 64

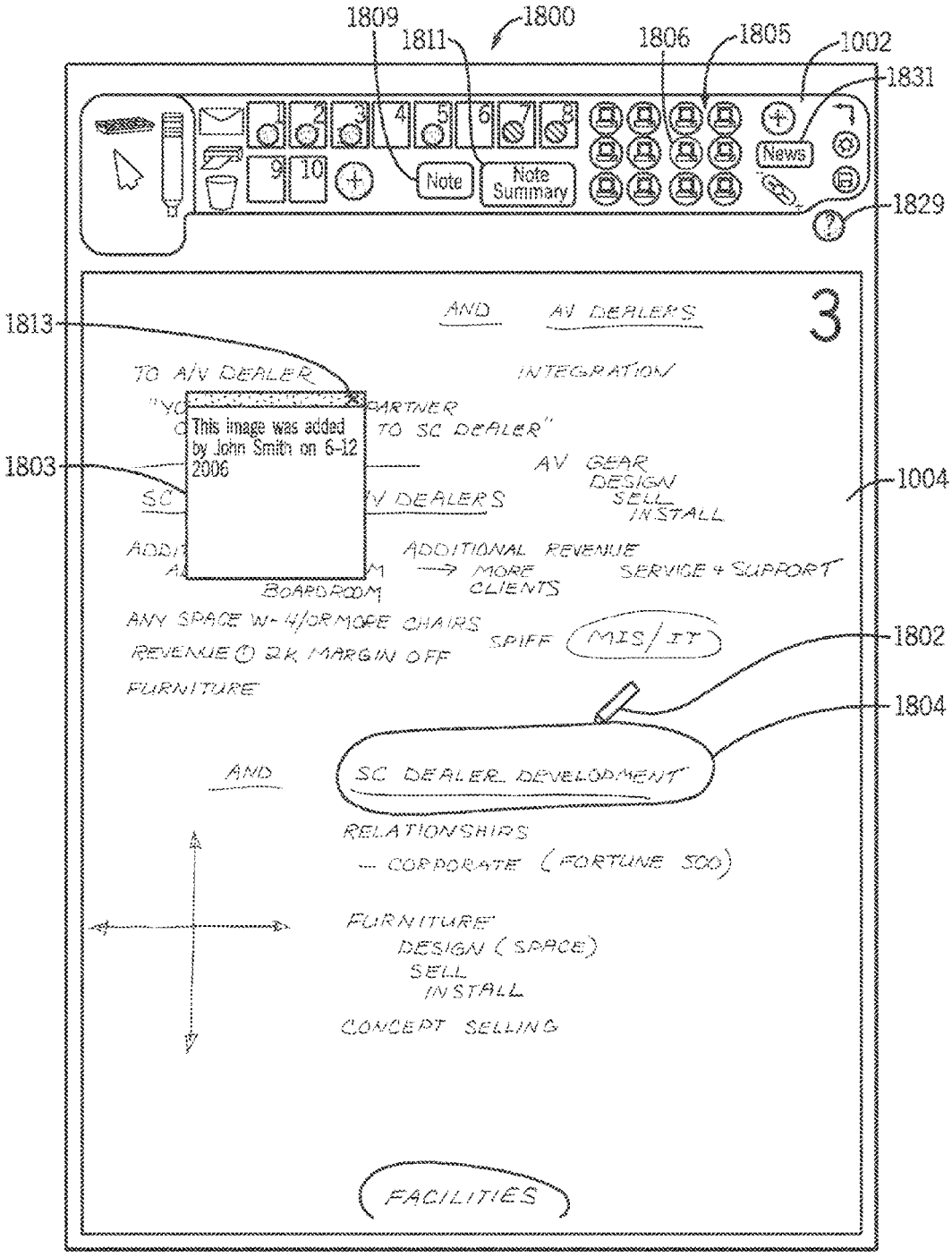
1809
1811
1800
1806
1805
1002
1831
Note
Note Summary
News
1829
1813
1803
1004
1802
1804
AND
AV DEALERS
3
INTEGRATION
TO A/V DEALER
PARTNER
TO SC DEALER"
This image was added by John Smith on 6-12 2006
AV GEAR
DESIGN
SELL
INSTALL
SC
V DEALERS
ADDITIONAL REVENUE
MORE CLIENTS
SERVICE + SUPPORT
BOARDROOM
ANY SPACE W- 4/OR MORE CHAIRS
REVENUE @ 2K MARGIN OFF
FURNITURE
SPIFF
MIS/IT
AND
SC DEALER DEVELOPMENT
RELATIONSHIPS
— CORPORATE (FORTUNE 500)
FURNITURE
DESIGN (SPACE)
SELL
INSTALL
CONCEPT SELLING
FACILITIES

FIG. 65

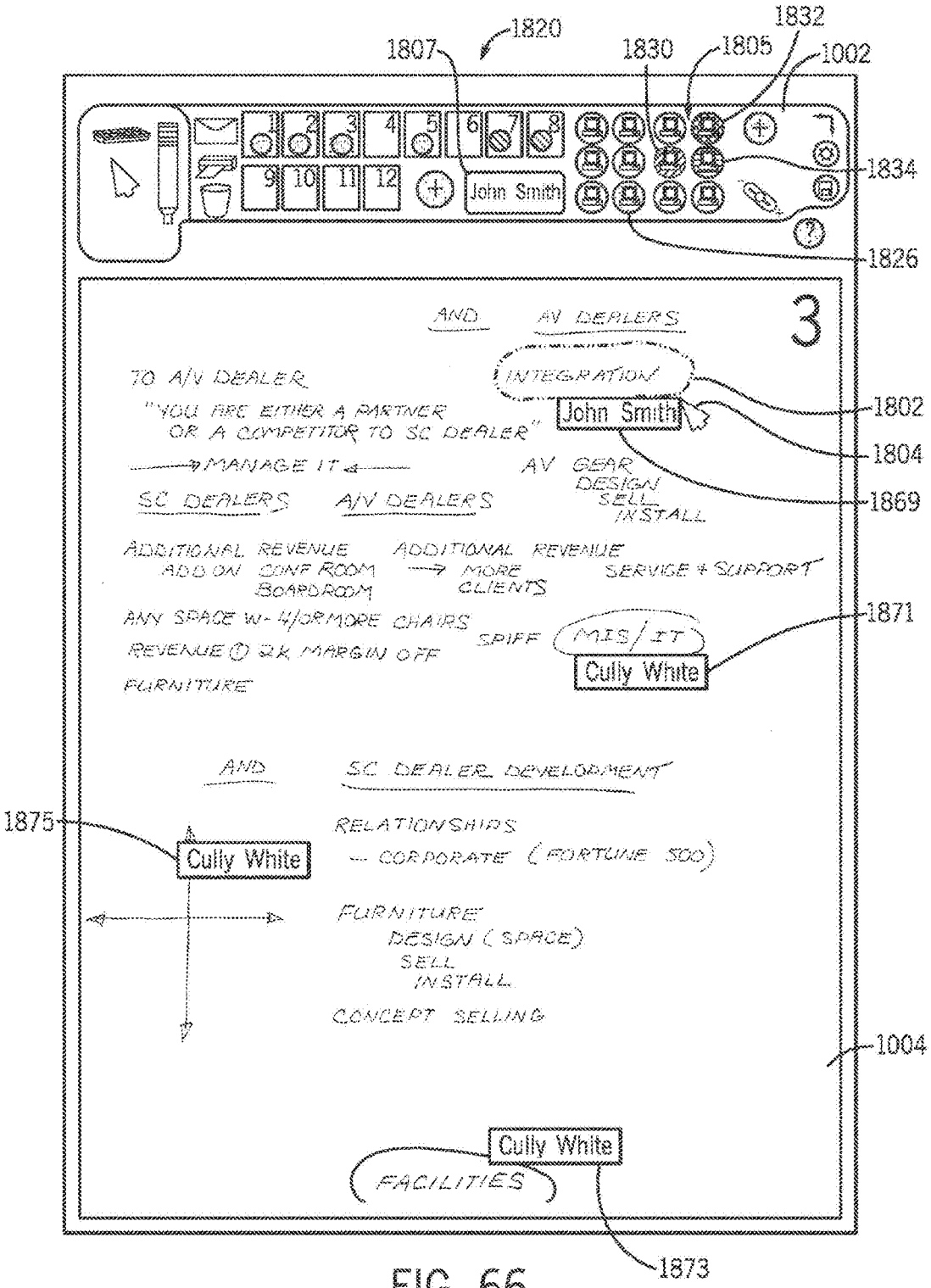
1820
1807
1830
1805
1832
1002
1834
1826
John Smith
AND
AV DEALERS
3
INTEGRATION
TO A/V DEALER
"YOU ARE EITHER A PARTNER OR A COMPETITOR TO SC DEALER"
John Smith
1802
1804
MANAGE IT
AV GEAR
DESIGN
SELL
INSTALL
1869
SC DEALERS
A/V DEALERS
ADDITIONAL REVENUE
ADD ON CONF ROOM BOARDROOM
ADDITIONAL REVENUE
MORE CLIENTS
SERVICE + SUPPORT
ANY SPACE W- 4/OR MORE CHAIRS
REVENUE @ 2K MARGIN OFF FURNITURE
SPIFF
MIS/IT
Cully White
1871
AND
SC DEALER DEVELOPMENT
1875
Cully White
RELATIONSHIPS
— CORPORATE (FORTUNE 500)
FURNITURE
DESIGN (SPACE)
SELL
INSTALL
CONCEPT SELLING
1004
Cully White
FACILITIES
1873

FIG. 66

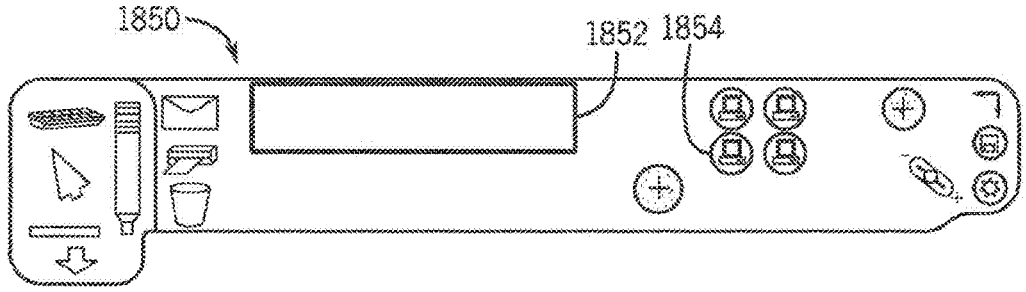

FIG. 67

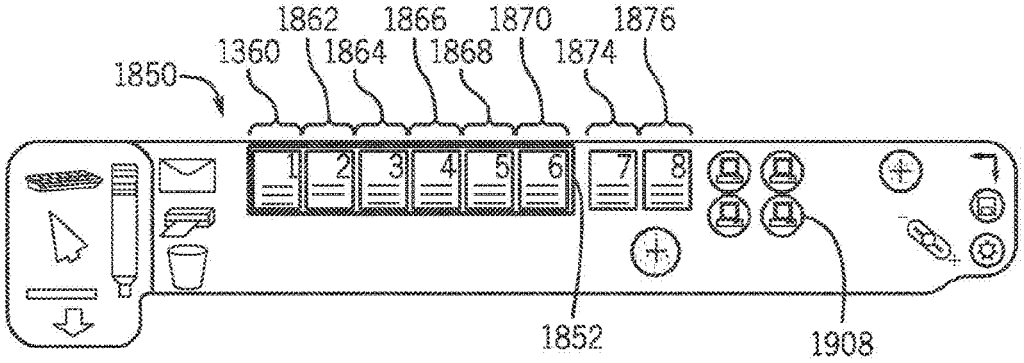

FIG. 68

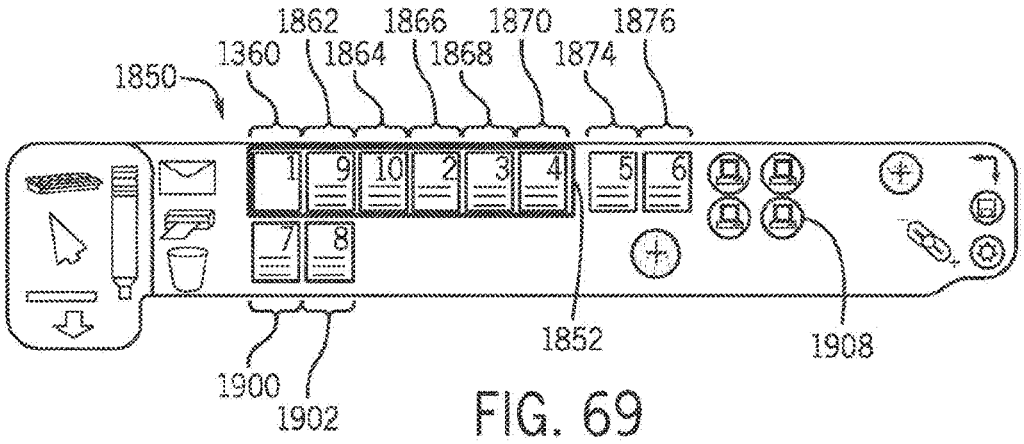

FIG. 69

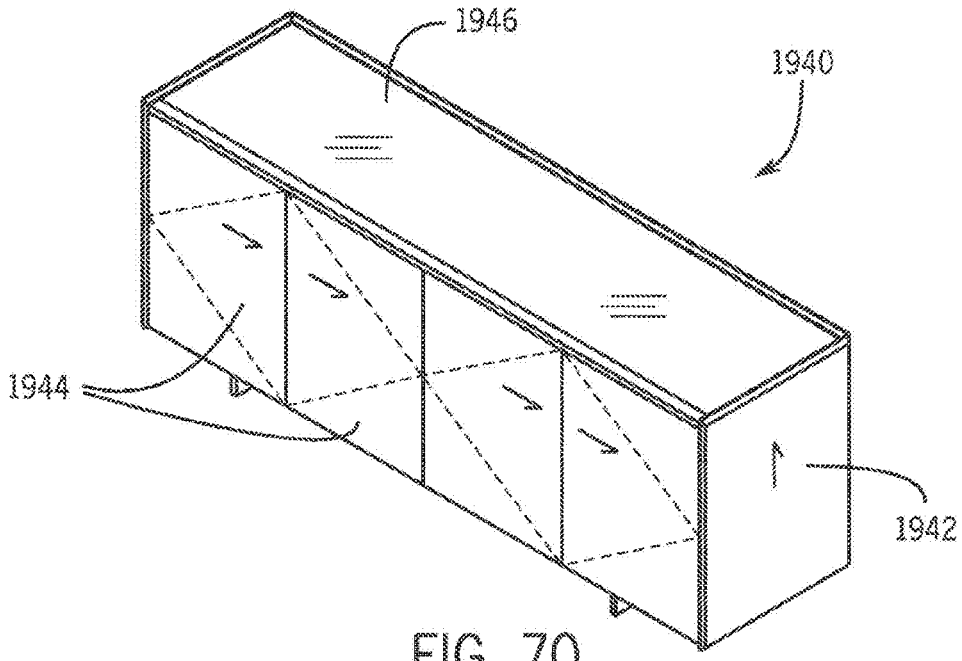

FIG. 70

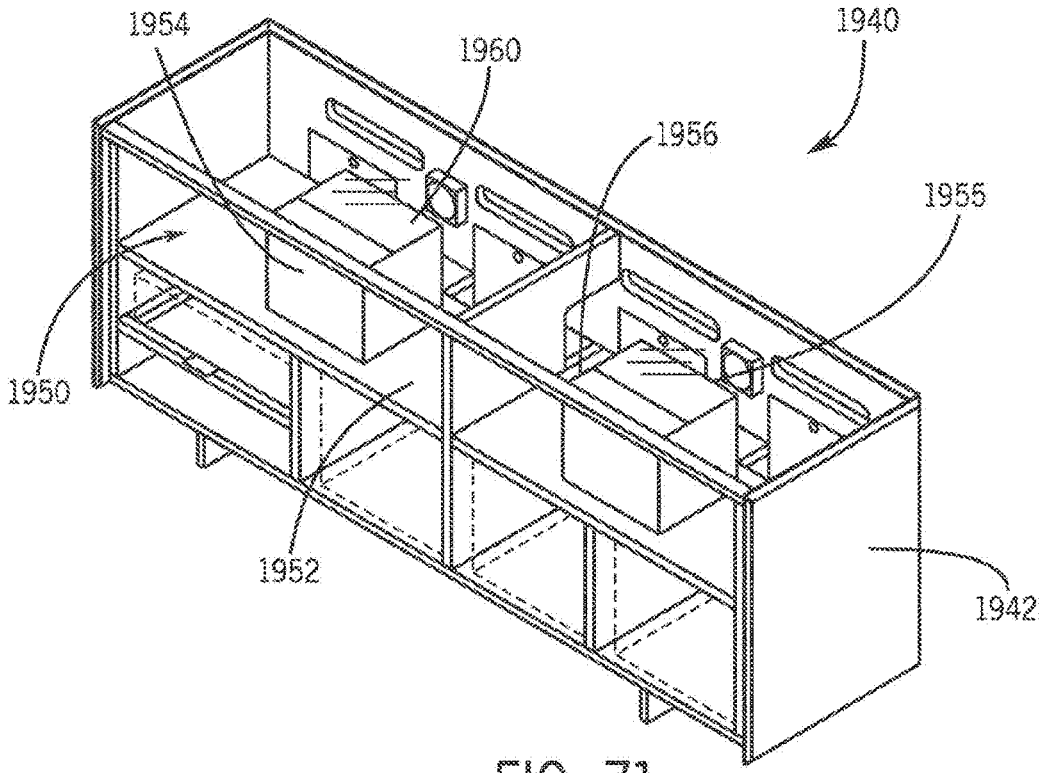

FIG. 71

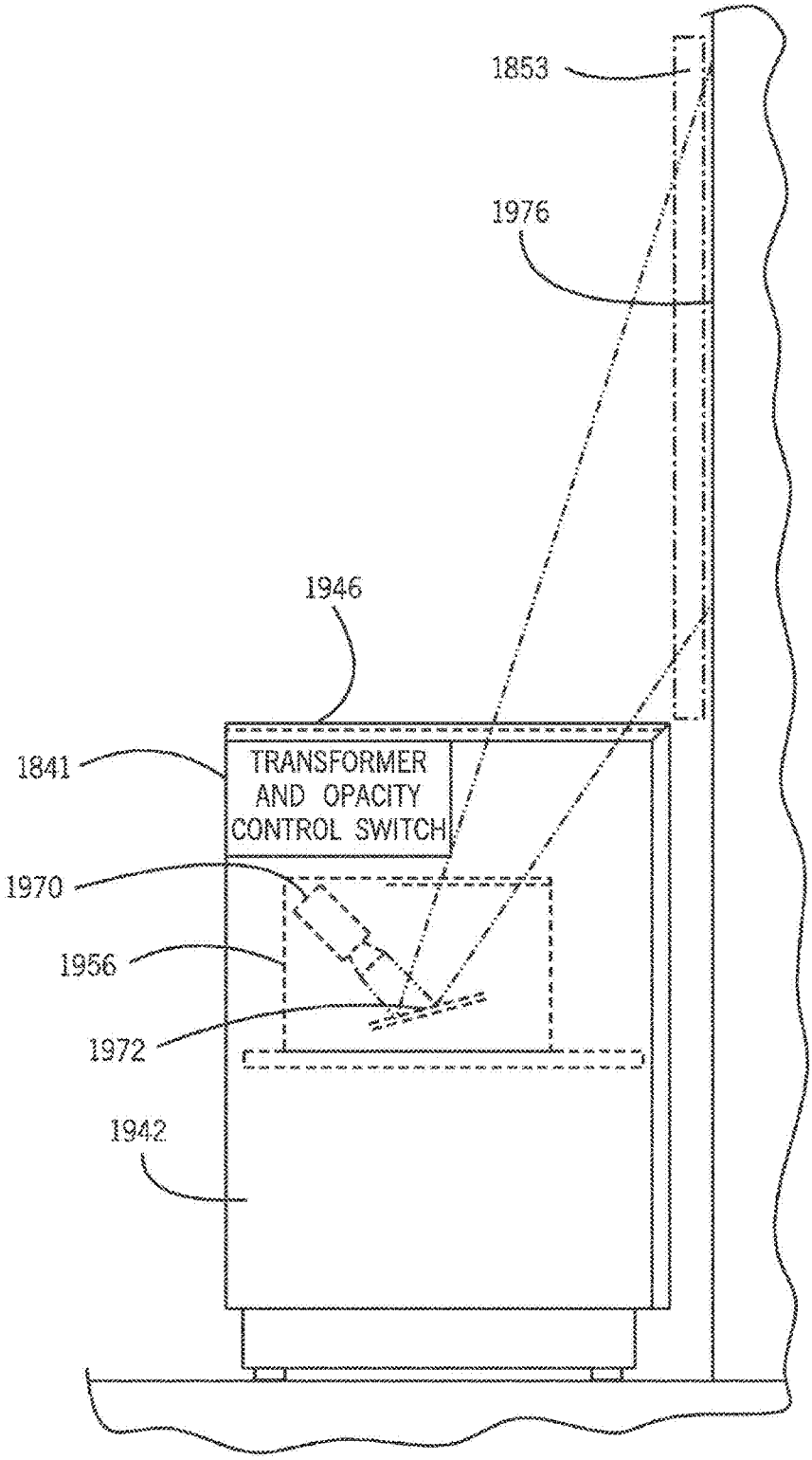
1853
1976
1946
1841
TRANSFORMER
AND OPACITY
CONTROL SWITCH
1970
1956
1972
1942

FIG. 72

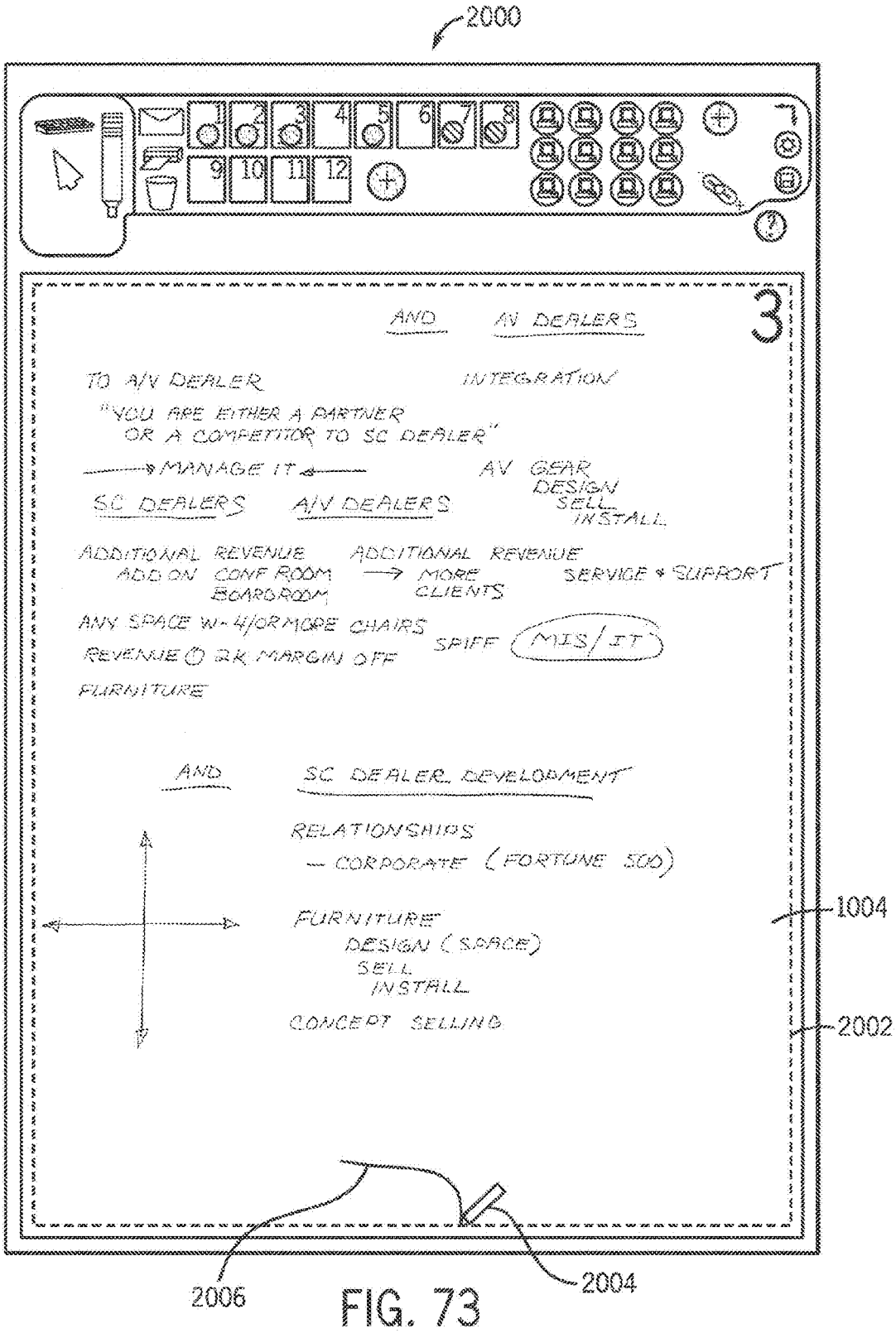
2000
AND AV DEALERS
3
TO A/V DEALER
INTEGRATION
"YOU ARE EITHER A PARTNER OR A COMPETITOR TO SC DEALER"
MANAGE IT
AV GEAR
DESIGN
SELL
INSTALL
SC DEALERS
A/V DEALERS
ADDITIONAL REVENUE
ADD ON CONF ROOM BOARDROOM
ADDITIONAL REVENUE
MORE CLIENTS
SERVICE + SUPPORT
ANY SPACE W- 4/OR MORE CHAIRS
SPIFF
MIS/IT
REVENUE @ 2K MARGIN OFF
FURNITURE
AND
SC DEALER DEVELOPMENT
RELATIONSHIPS
— CORPORATE (FORTUNE 500)
FURNITURE
DESIGN (SPACE)
SELL
INSTALL
CONCEPT SELLING
1004
2002
2006
2004

FIG. 73

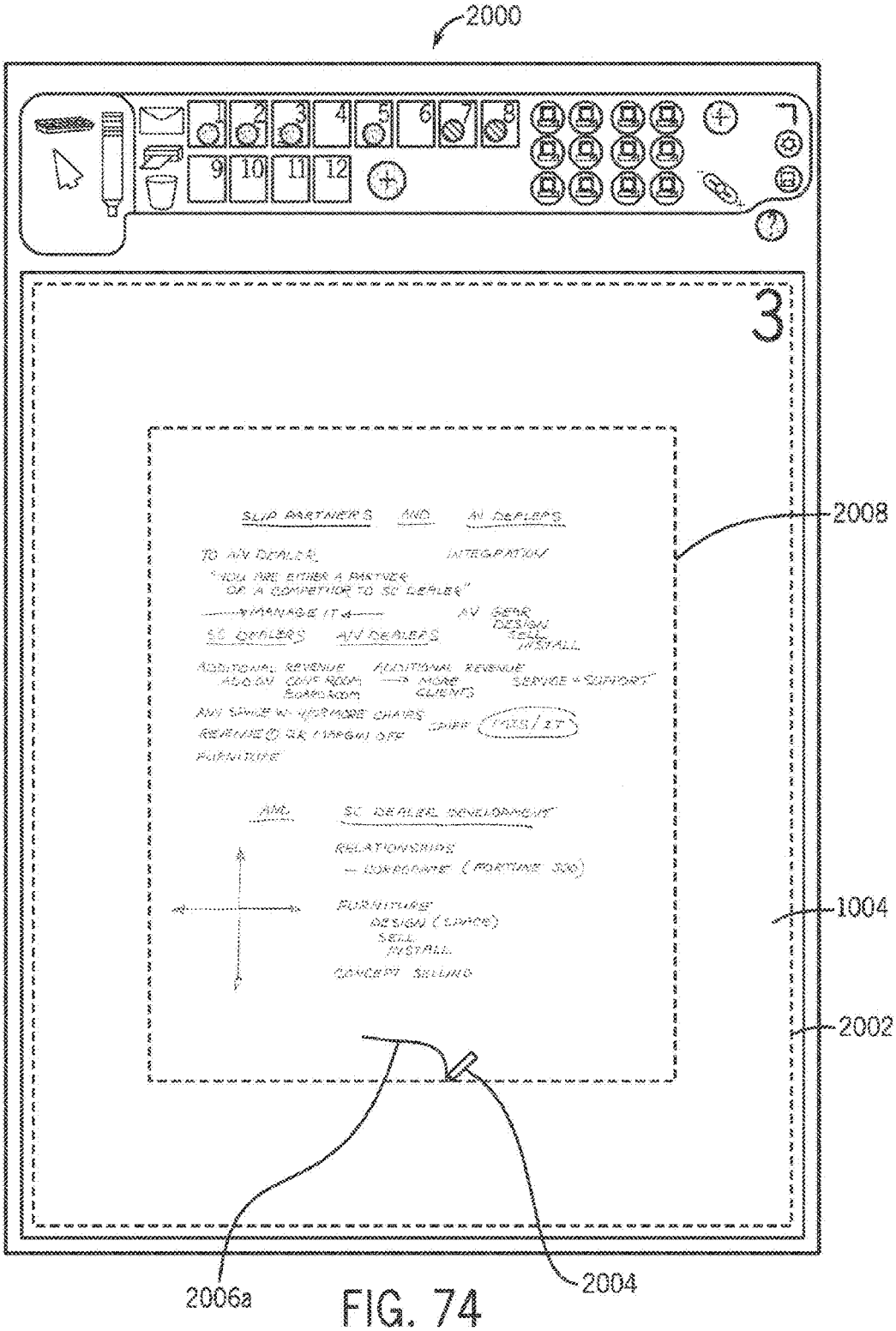

FIG. 74

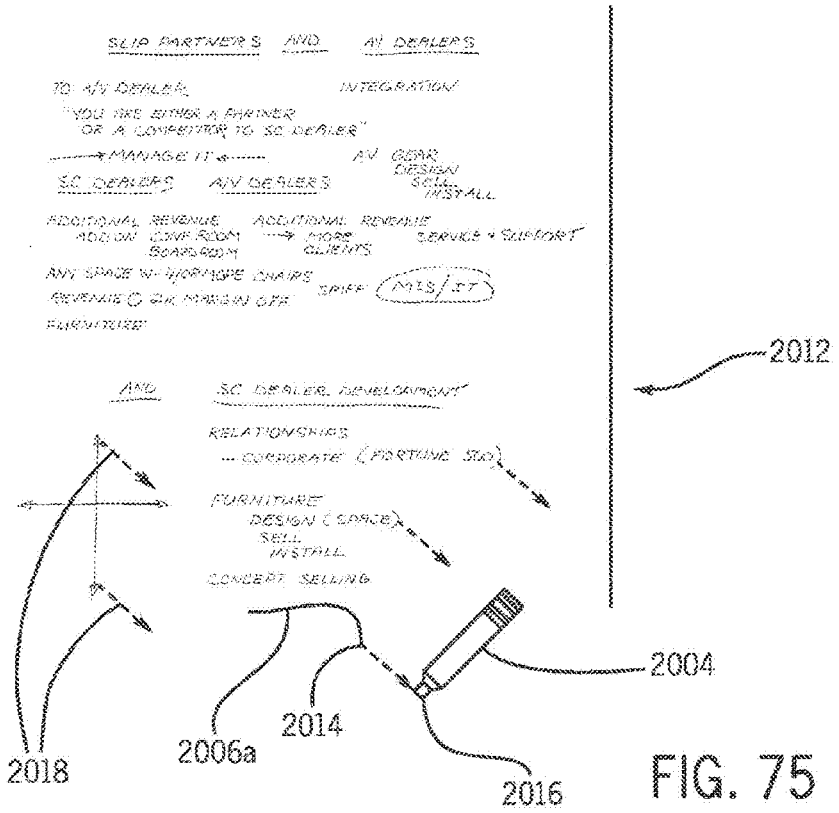
SLIP PARTNERS AND A/V DEALERS
TO A/V DEALER
INTEGRATION
"YOU ARE EITHER A PARTNER OR A COMPETITOR TO SC DEALER"
MANAGE IT
A/V GEAR DESIGN SELL INSTALL
SC DEALERS
A/V DEALERS
ADDITIONAL REVENUE ADD ON CONF ROOM BOARDROOM
ADDITIONAL REVENUE MORE CLIENTS
SERVICE + SUPPORT
ANY SPACE W/ 4/OR MORE CHAIRS
SPIFF
MIS/IT
FURNITURE
AND
SC DEALER DEVELOPMENT
RELATIONSHIPS
CORPORATE (FORTUNE 500)
FURNITURE
DESIGN (SPACE)
SELL
INSTALL
CONCEPT SELLING
2012
2004
2014
2006a
2018
2016

FIG. 75

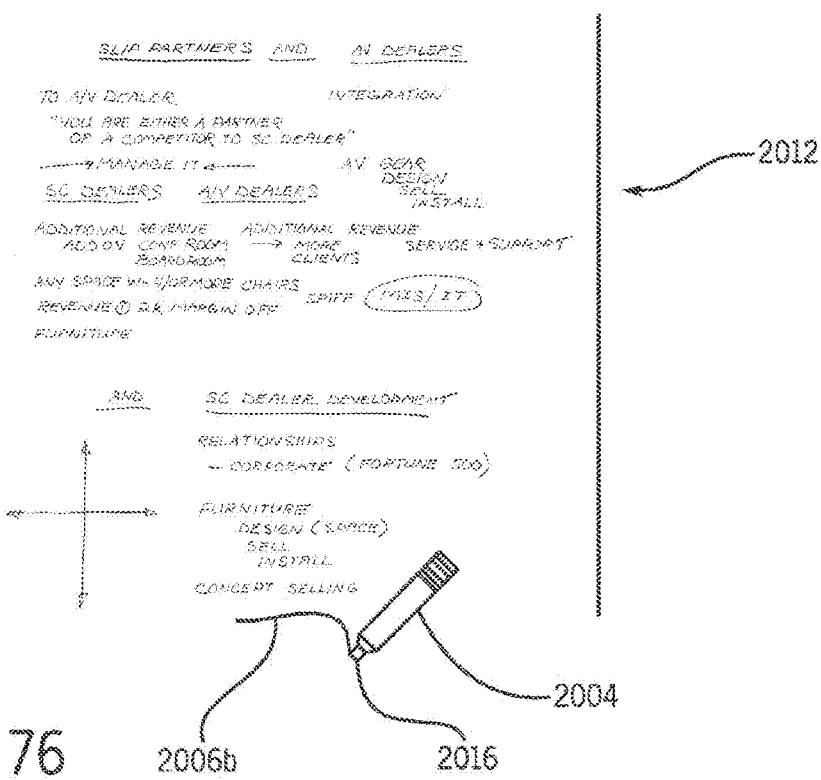
SLIP PARTNERS AND A/V DEALERS
TO A/V DEALER
INTEGRATION
"YOU ARE EITHER A PARTNER OR A COMPETITOR TO SC DEALER"
MANAGE IT
A/V GEAR DESIGN SELL INSTALL
SC DEALERS
A/V DEALERS
ADDITIONAL REVENUE ADD ON CONF ROOM BOARDROOM
ADDITIONAL REVENUE MORE CLIENTS
SERVICE + SUPPORT
ANY SPACE W/ 4/OR MORE CHAIRS
SPIFF
MIS/IT
FURNITURE
AND
SC DEALER DEVELOPMENT
RELATIONSHIPS
CORPORATE (FORTUNE 500)
FURNITURE
DESIGN (SPACE)
SELL
INSTALL
CONCEPT SELLING
2012
2004
2006b
2016

FIG. 76

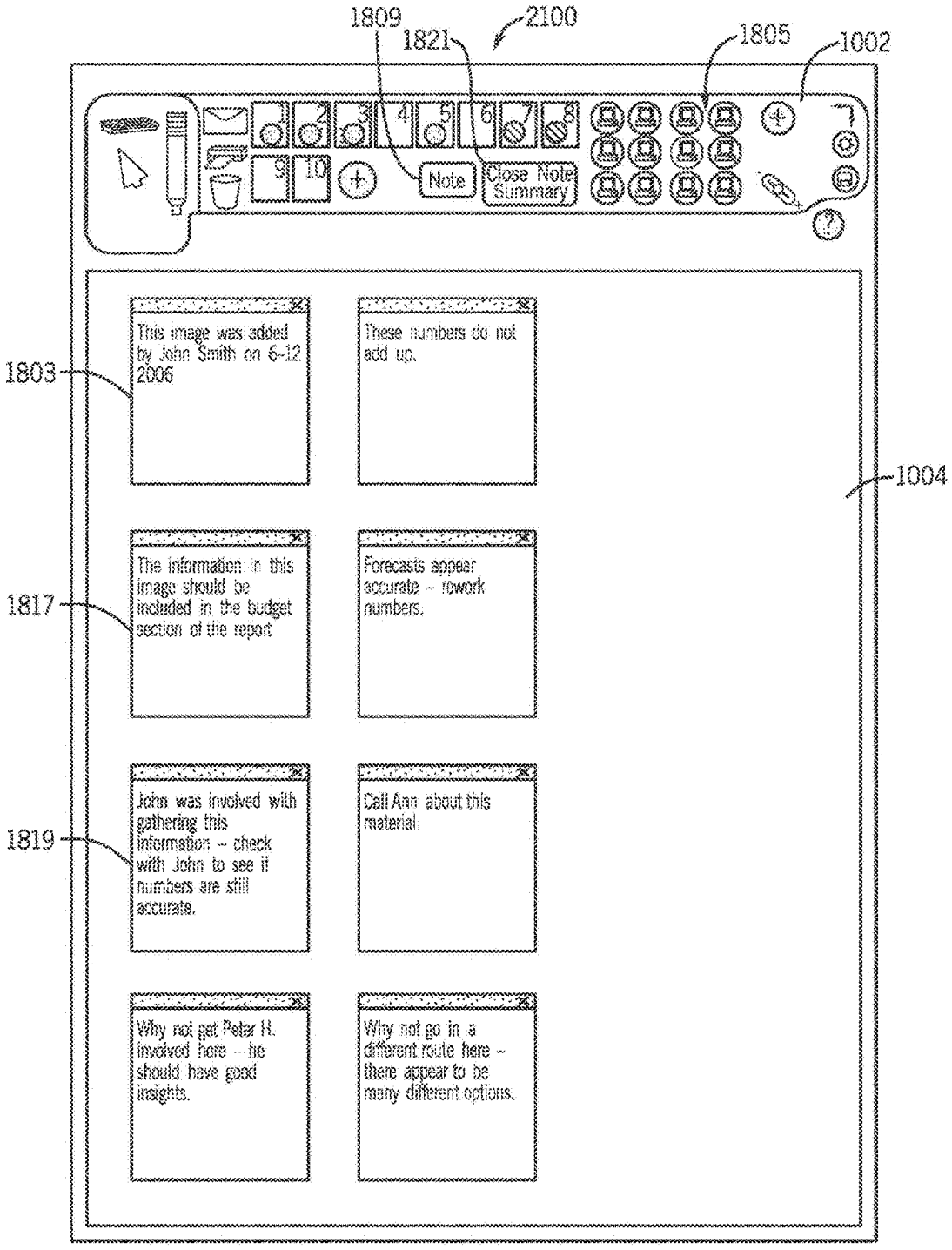
1809
1821
2100
1805
1002
Note
Close Note Summary
1803
This image was added by John Smith on 6-12 2006
These numbers do not add up.
1004
1817
The information in this image should be included in the budget section of the report
Forecasts appear accurate – rework numbers.
1819
John was involved with gathering this information – check with John to see if numbers are still accurate.
Call Ann about this material.
Why not get Peter H. involved here – he should have good insights.
Why not go in a different route here – there appear to be many different options.

FIG. 77

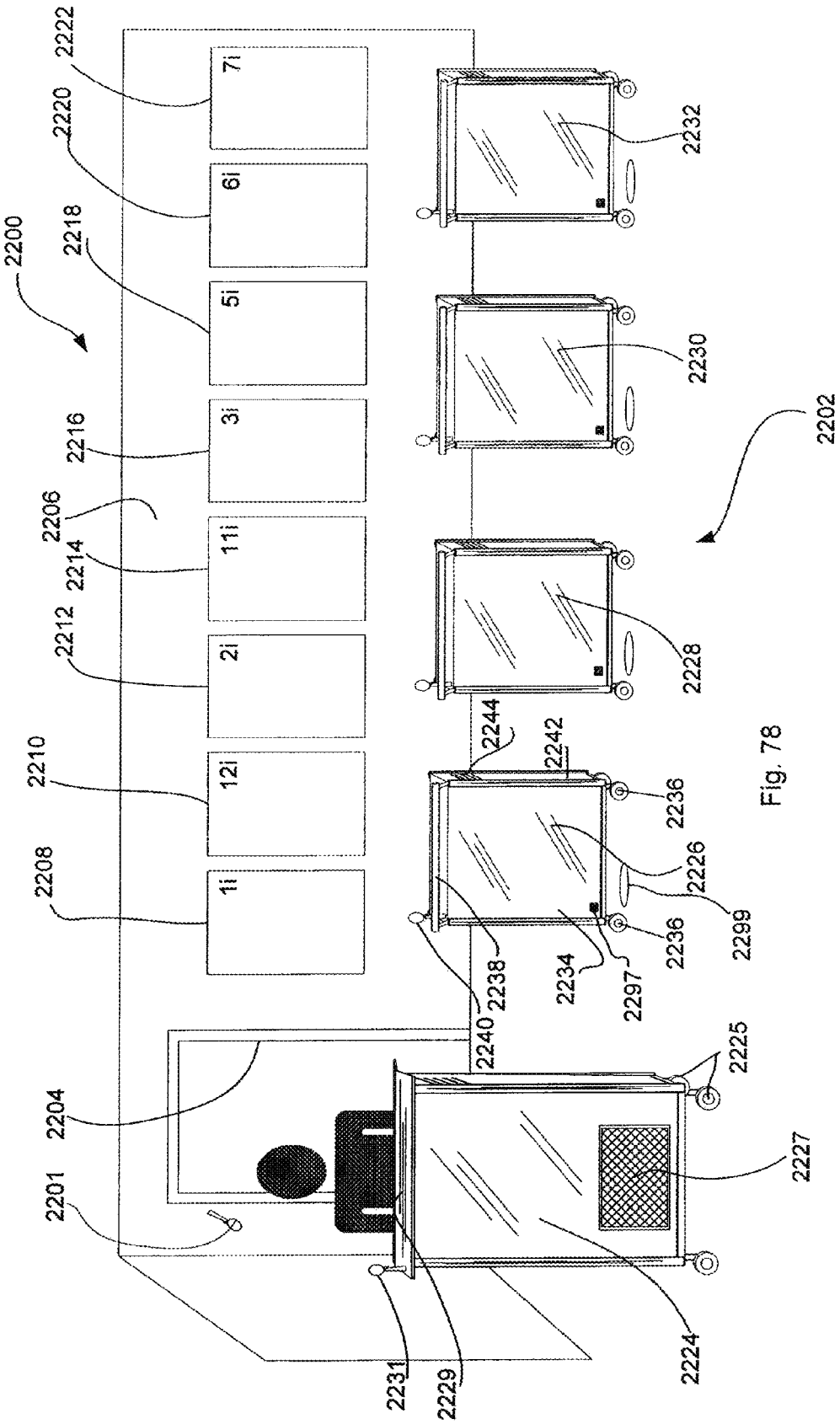
2200
2202
2204
2206
2208
2210
2212
2214
2216
2218
2220
2222
2224
2225
2226
2227
2228
2229
2230
2231
2232
2234
2236
2238
2240
2242
2244
2297
2299
1i
2i
3i
5i
6i
7i
11i
12i
2201

Fig. 78

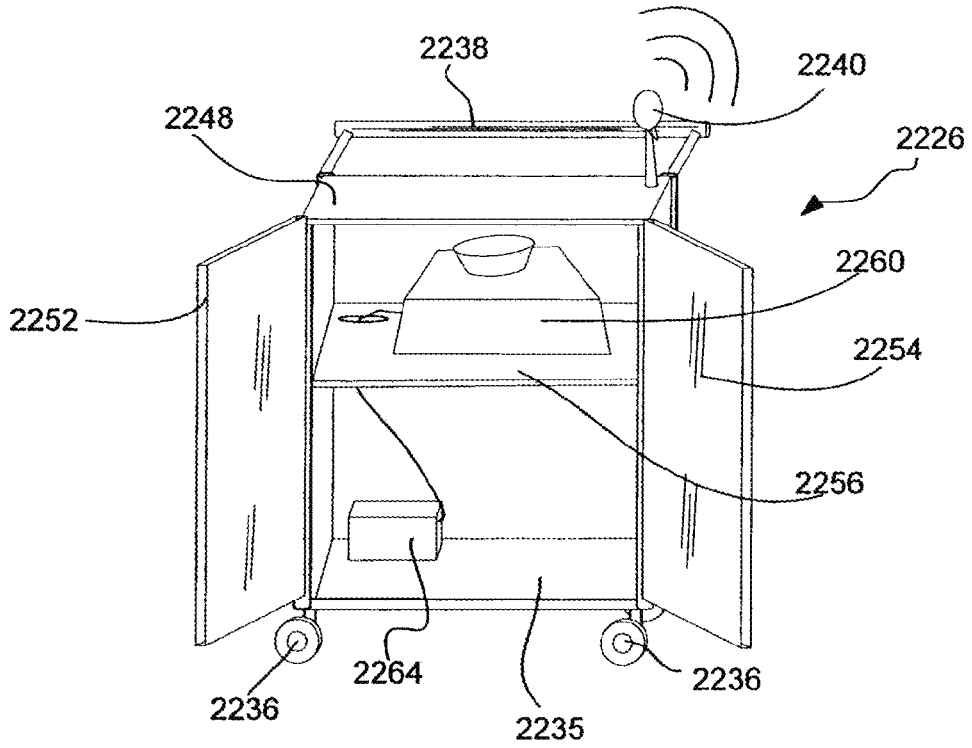
2238
2240
2248
2226
2260
2252
2254
2256
2264
2236
2236
2235

Fig. 79

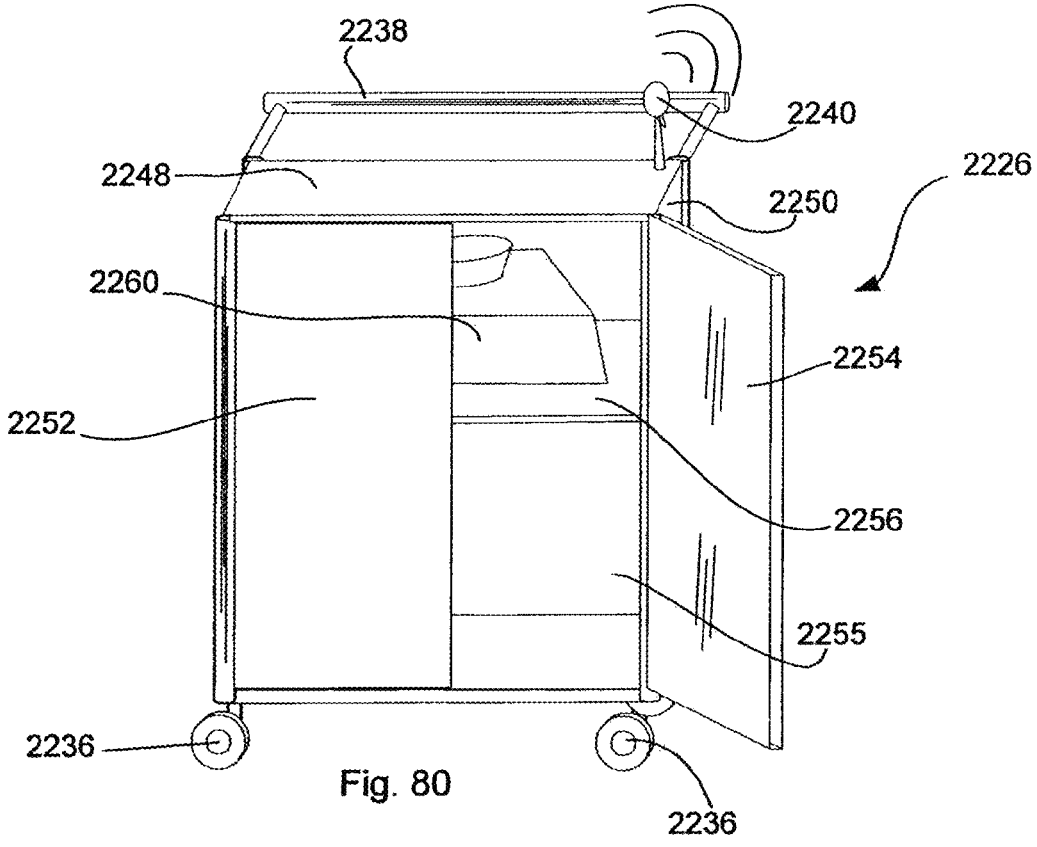
2238
2240
2248
2226
2250
2260
2254
2252
2256
2255
2236
2236

Fig. 80

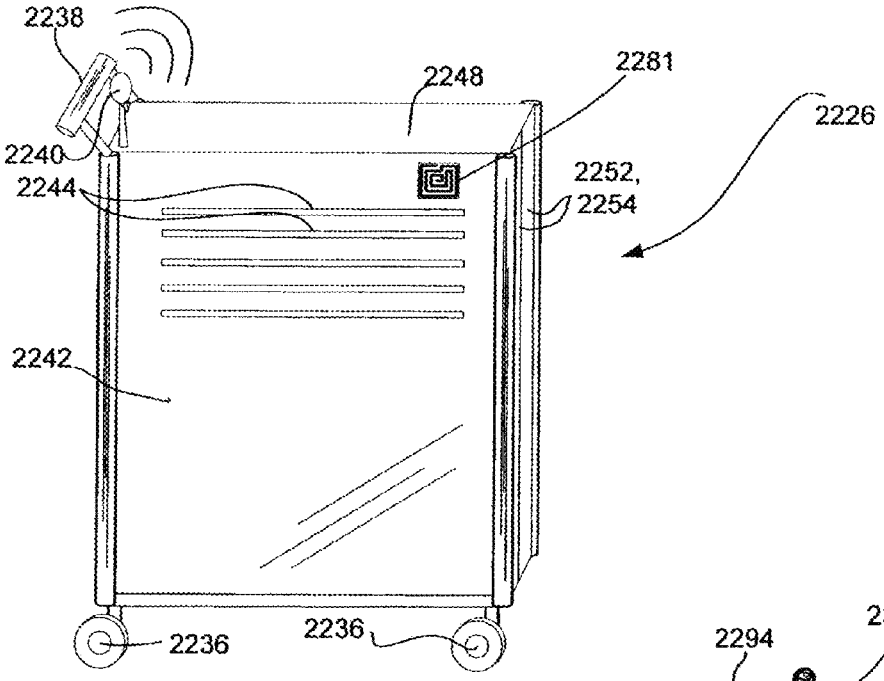
2238
2248
2281
2226
2240
2244
2252,
2254
2242
2236
2236

Fig. 81

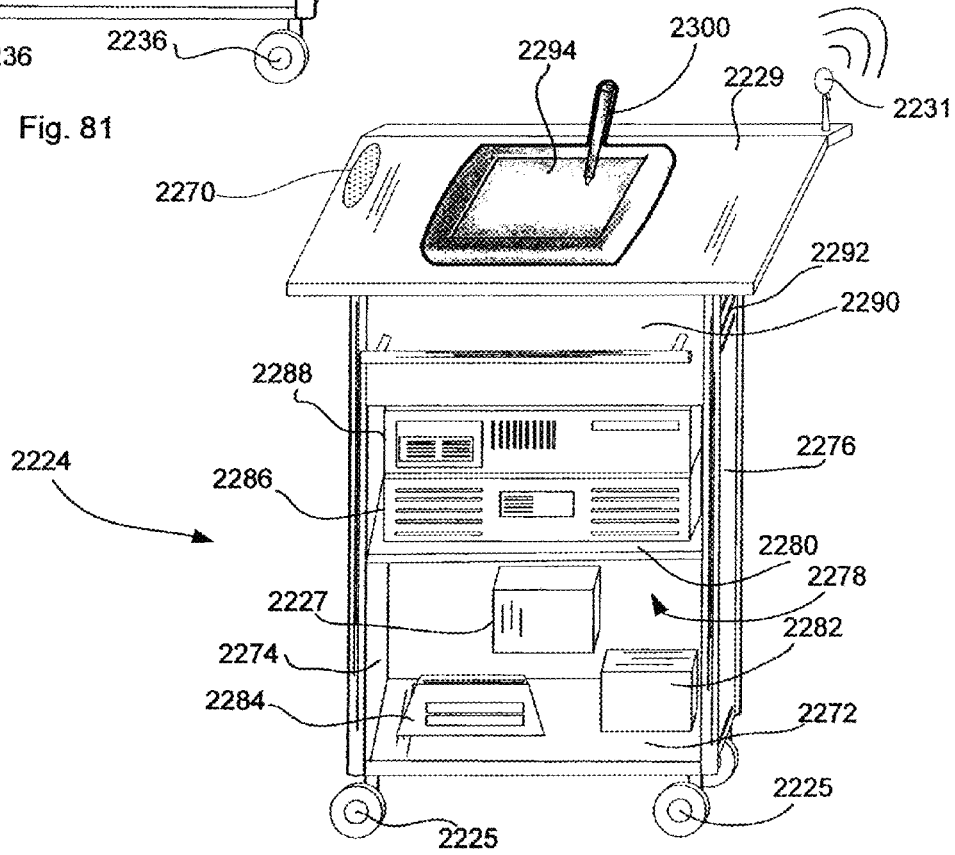
2300
2294
2229
2231
2270
2292
2290
2288
2276
2224
2286
2280
2278
2227
2282
2274
2284
2272
2225
2225

Fig. 82

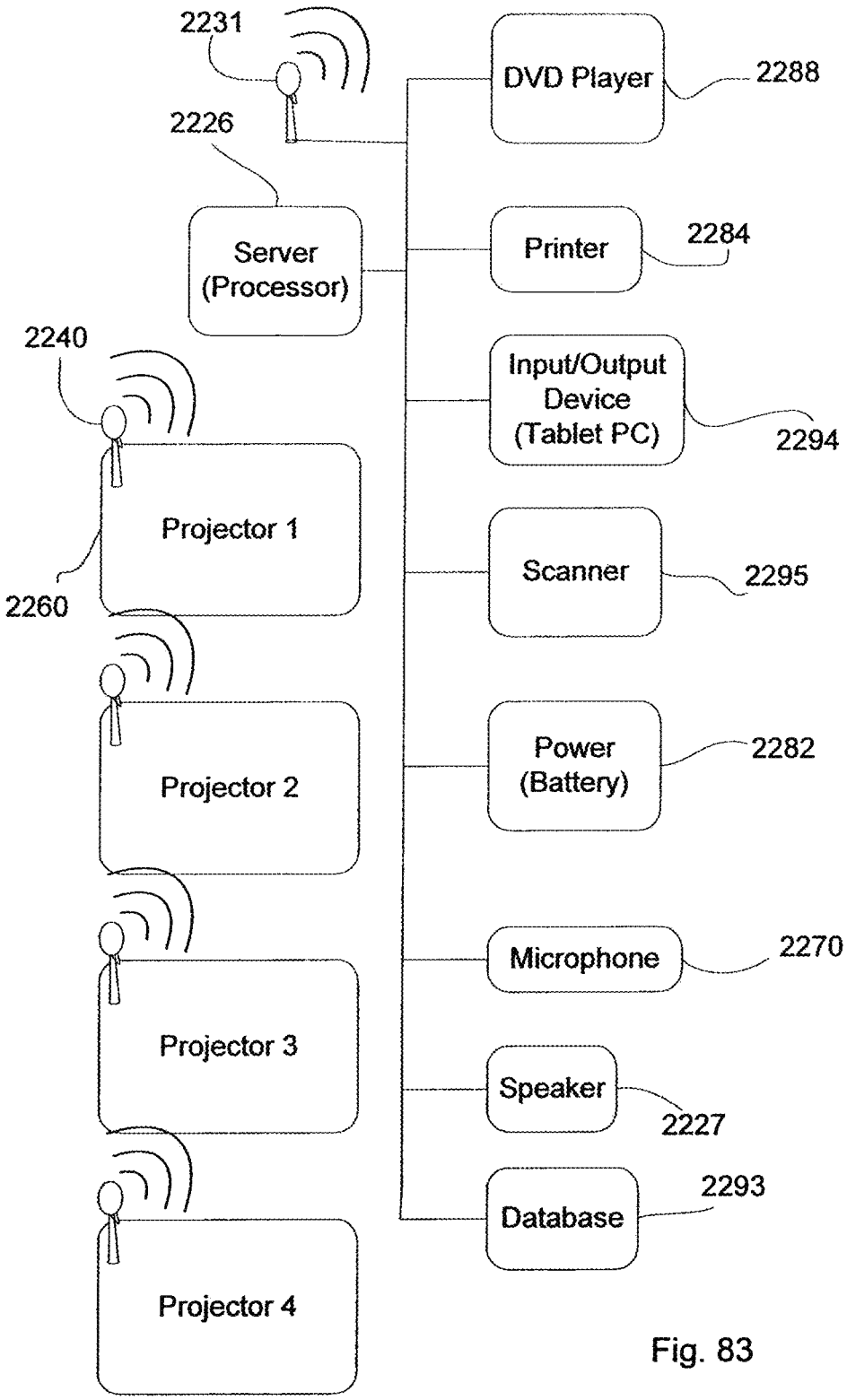
2231
2226
Server (Processor)
2240
Projector 1
2260
Projector 2
Projector 3
Projector 4
DVD Player
2288
Printer
2284
Input/Output Device (Tablet PC)
2294
Scanner
2295
Power (Battery)
2282
Microphone
2270
Speaker
2227
Database
2293

Fig. 83

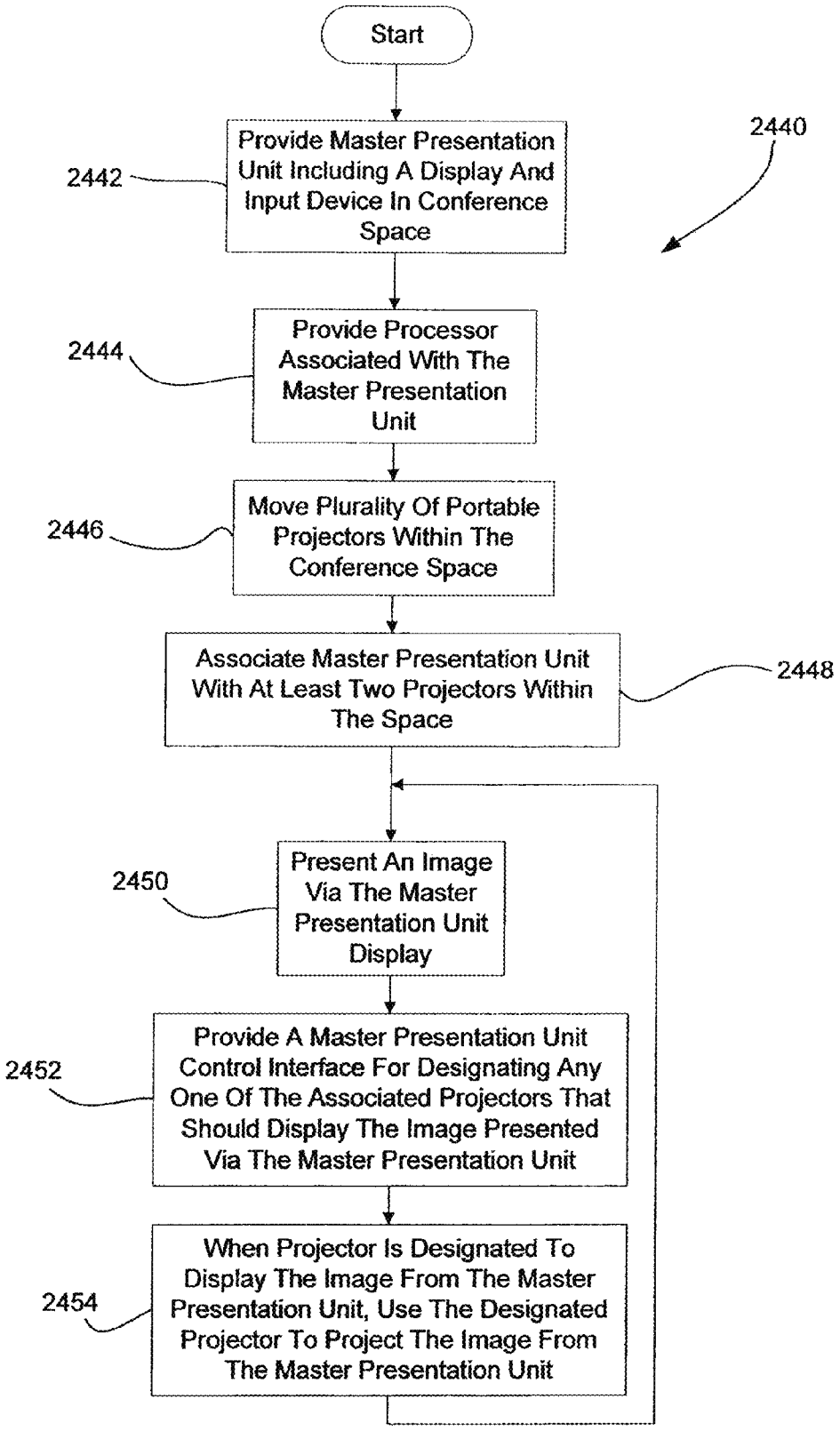
Start
Provide Master Presentation Unit Including A Display And Input Device In Conference Space
2440
2442
Provide Processor Associated With The Master Presentation Unit
2444
Move Plurality Of Portable Projectors Within The Conference Space
2446
Associate Master Presentation Unit With At Least Two Projectors Within The Space
2448
Present An Image Via The Master Presentation Unit Display
2450
Provide A Master Presentation Unit Control Interface For Designating Any One Of The Associated Projectors That Should Display The Image Presented Via The Master Presentation Unit
2452
When Projector Is Designated To Display The Image From The Master Presentation Unit, Use The Designated Projector To Project The Image From The Master Presentation Unit
2454

Fig. 84

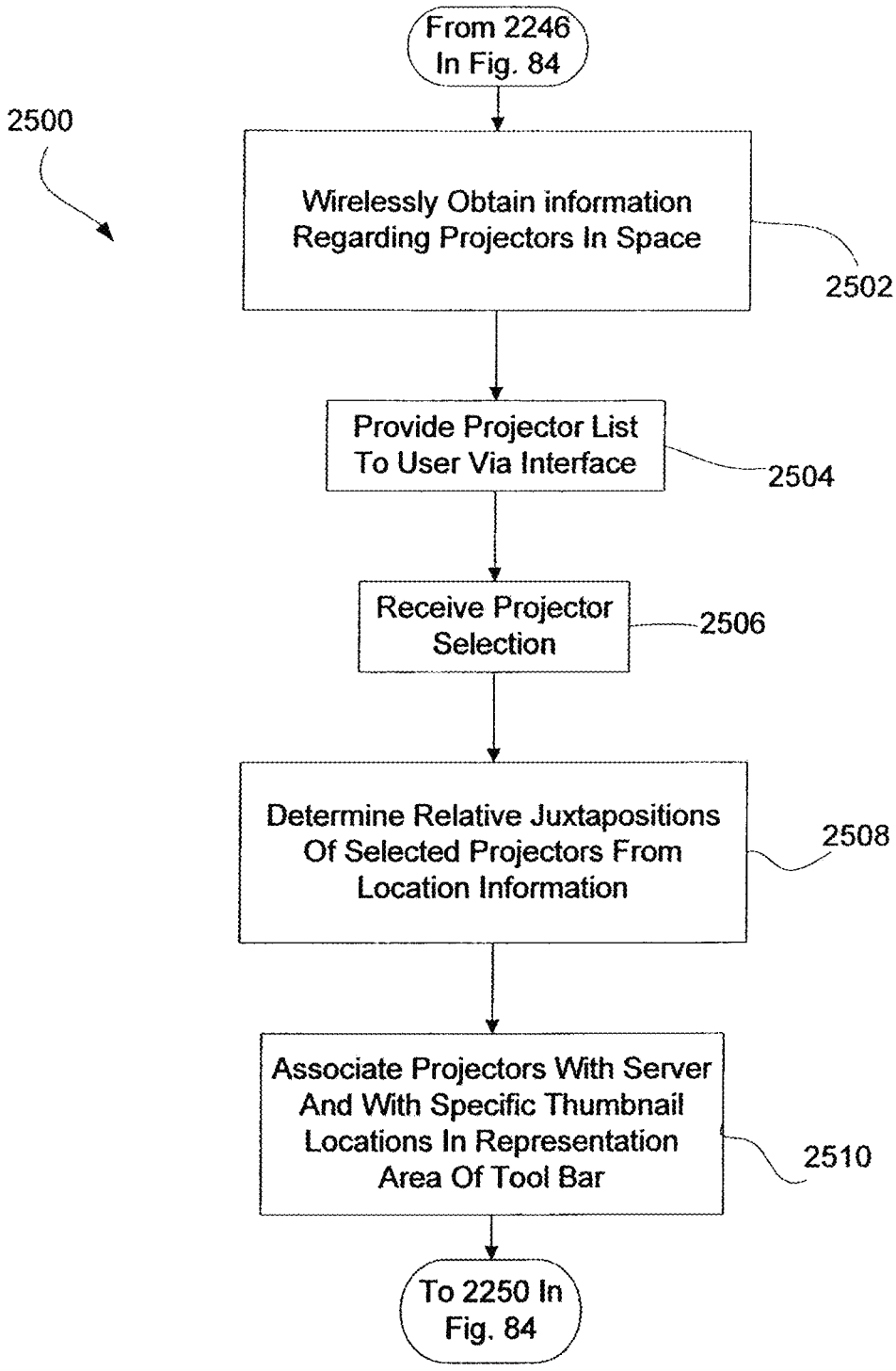
From 2246 In Fig. 84
2500
Wirelessly Obtain information Regarding Projectors In Space
2502
Provide Projector List To User Via Interface
2504
Receive Projector Selection
2506
Determine Relative Juxtapositions Of Selected Projectors From Location Information
2508
Associate Projectors With Server And With Specific Thumbnail Locations In Representation Area Of Tool Bar
2510
To 2250 In Fig. 84

Fig. 85

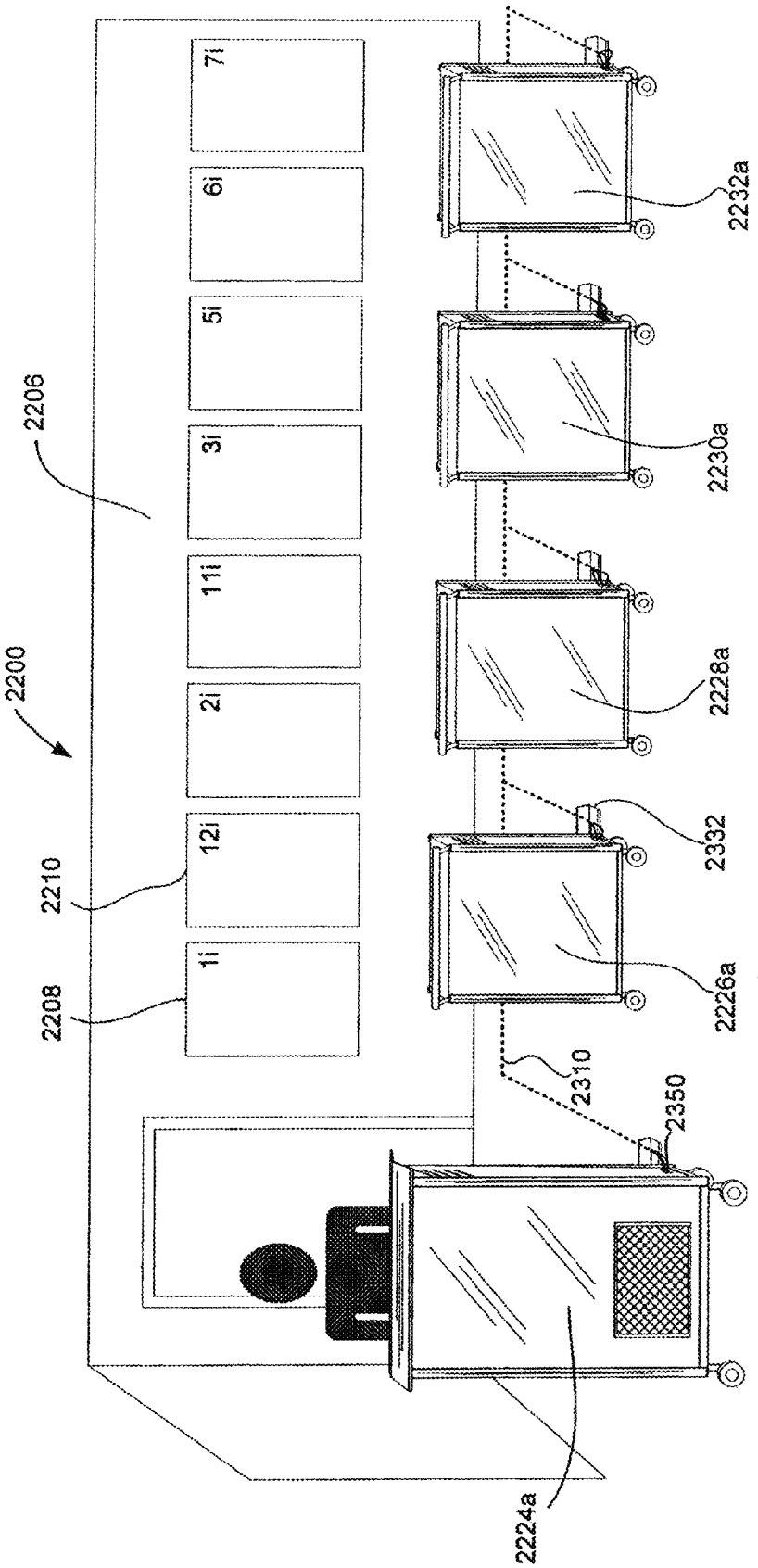
2206
2200
2210
2208
1i
12i
2i
11i
3i
5i
6i
7i
2232a
2230a
2228a
2332
2202a
2226a
2310
2350
2224a

Fig. 86

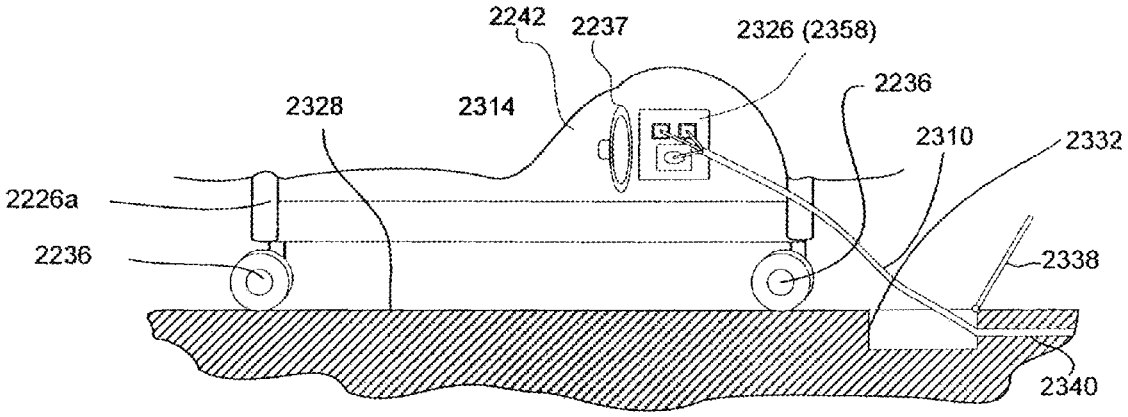
2242
2237
2326 (2358)
2236
2328
2314
2310
2332
2226a
2236
2338
2340

Fig. 87

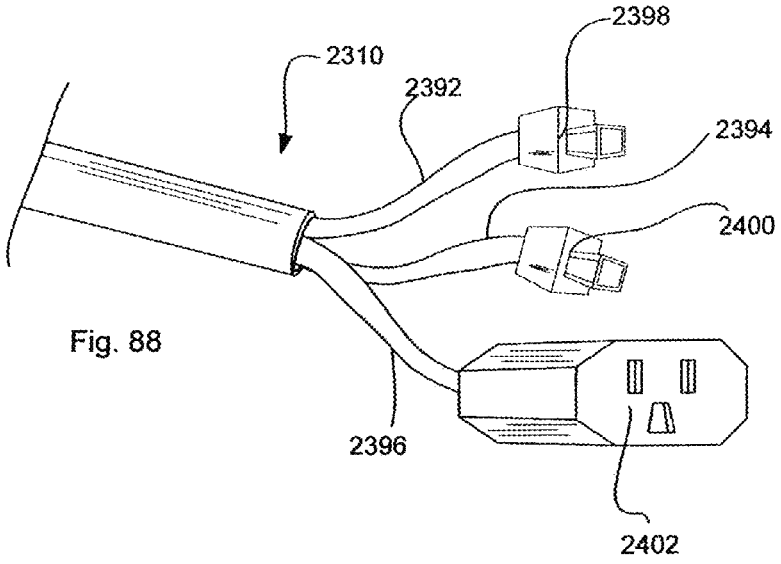
2398
2310
2392
2394
2400
2396
2402

Fig. 88

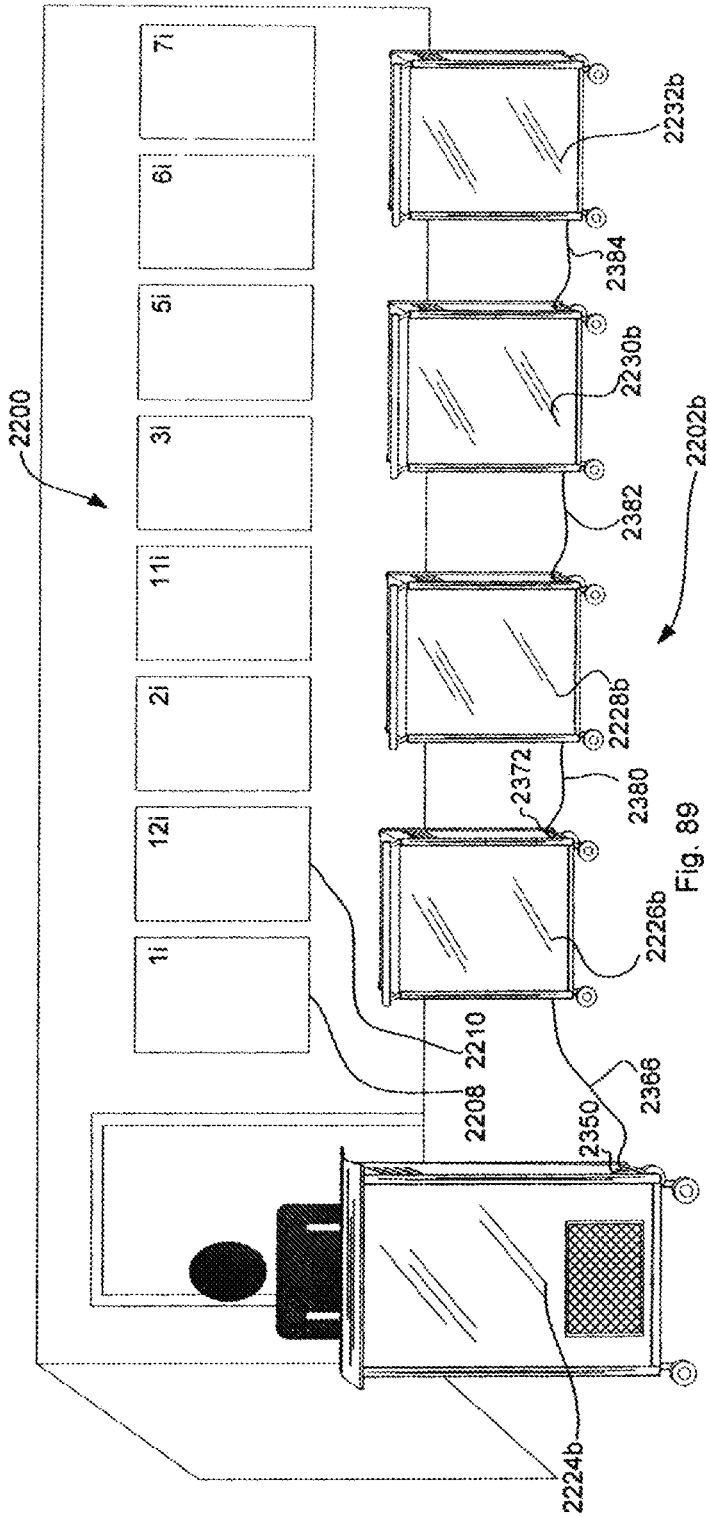
2200
1i
12i
2i
11i
3i
5i
6i
7i
2208
2210
2350
2366
2224b
2226b
2372
2380
2228b
2382
2230b
2384
2232b
2202b

Fig. 89

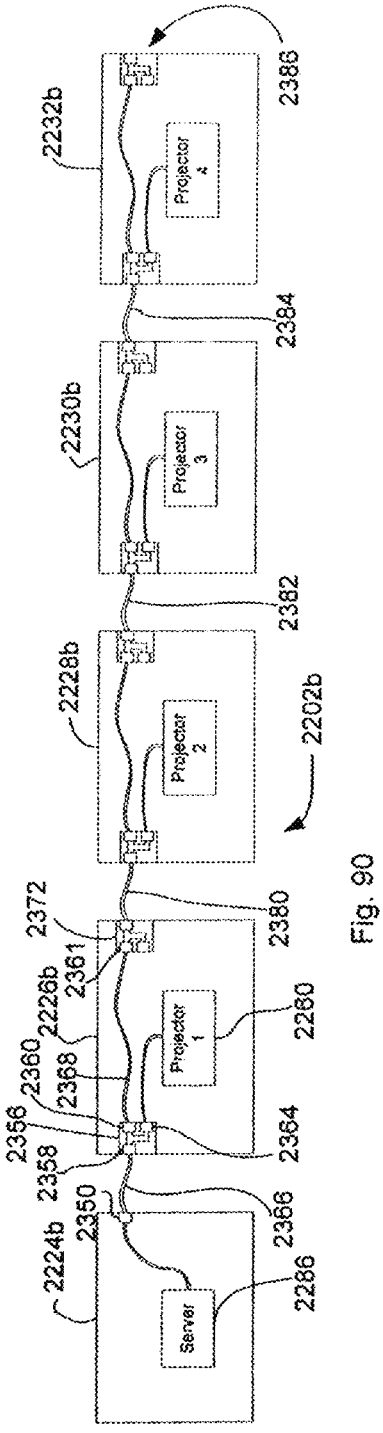
2386
2232b
Projector 4
2384
2230b
Projector 3
2382
2228b
Projector 2
2202b
2372
2380
2361
2226b
Projector 1
2280
2360
2368
2356
2364
2358
2350
2366
2224b
Server
2286

Fig. 90

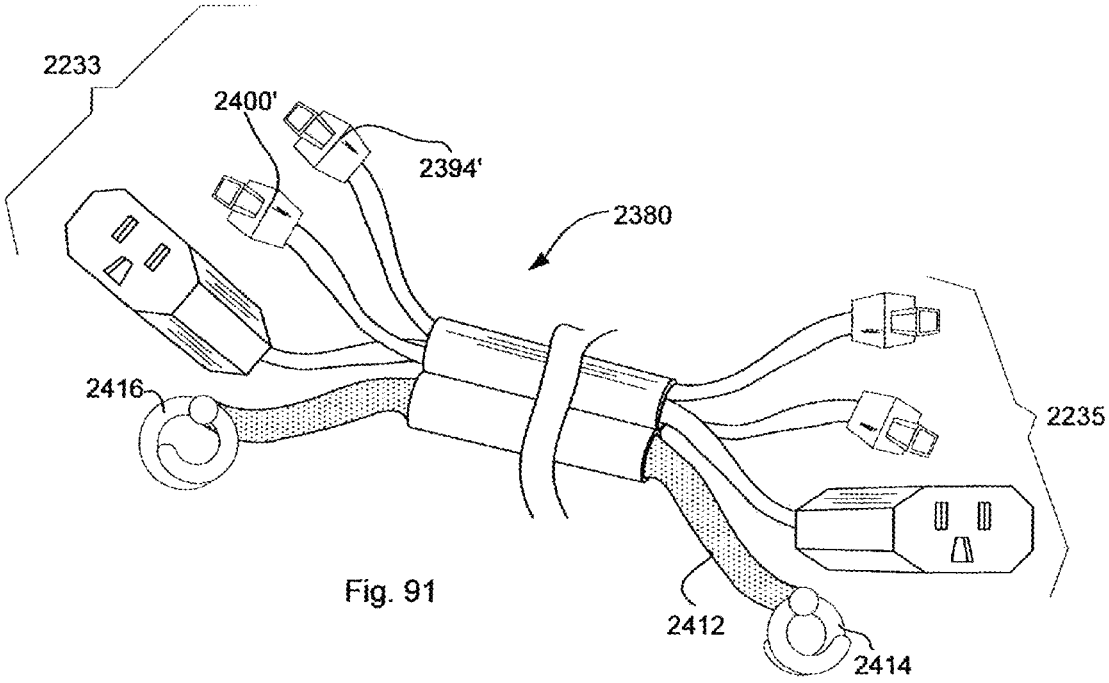
2233
2400'
2394'
2380
2416
2235
2412
2414

Fig. 91

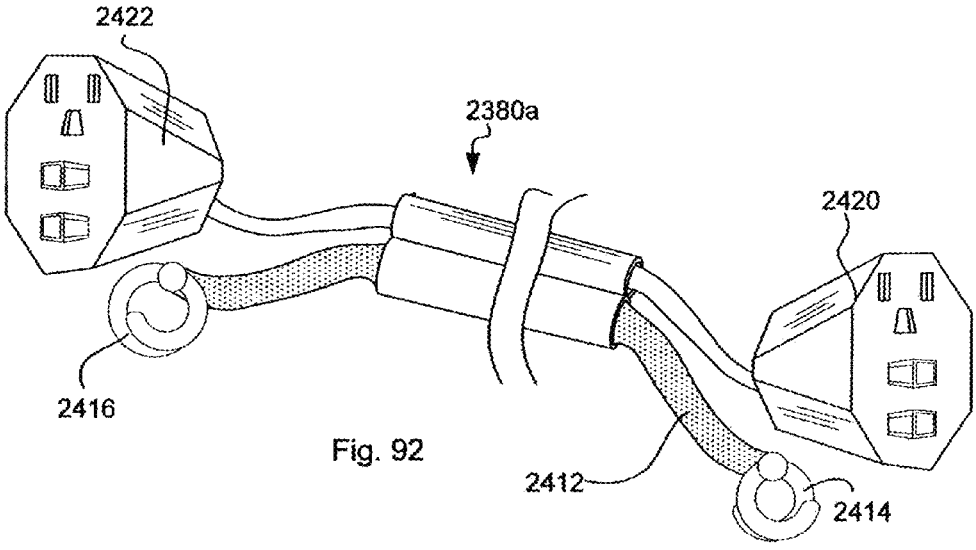
2422
2380a
2420
2416
2412
2414

Fig. 92

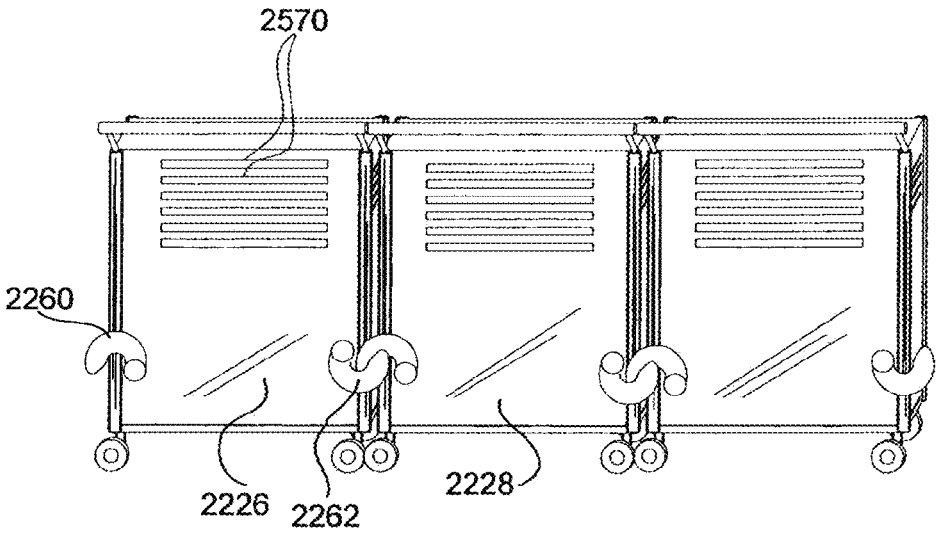
2570
2260
2226
2262
2228

Fig. 93

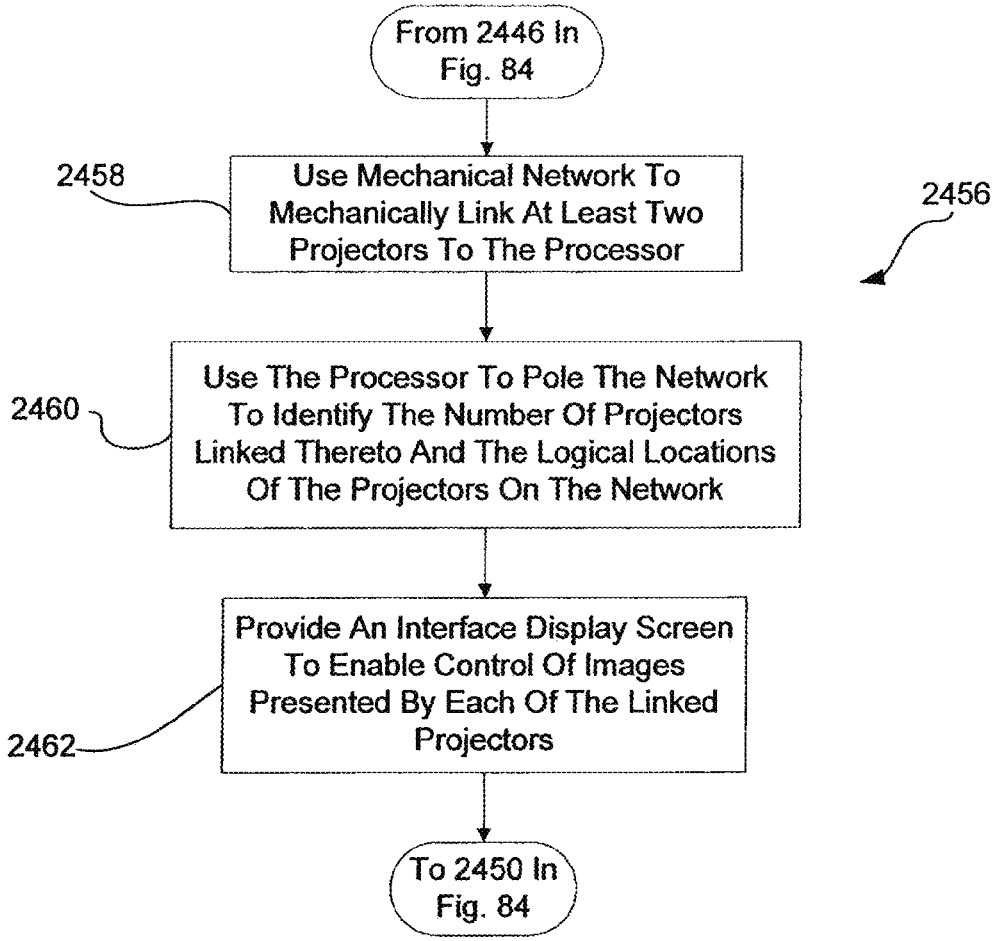
From 2446 In Fig. 84
2458
Use Mechanical Network To Mechanically Link At Least Two Projectors To The Processor
2456
2460
Use The Processor To Pole The Network To Identify The Number Of Projectors Linked Thereto And The Logical Locations Of The Projectors On The Network
Provide An Interface Display Screen To Enable Control Of Images Presented By Each Of The Linked Projectors
2462
To 2450 In Fig. 84

Fig. 94

PORTABLE PRESENTATION SYSTEM AND METHODS FOR USE THEREWITH

CROSS-REFERENCE TO RELATED APPLICATIONS

This application is a continuation of co-pending U.S. patent application Ser. No. 13/087,085, which was filed on Apr. 14, 2011, and entitled "Portable Presentation System And Method For Use Therewith," which was a continuation of U.S. patent application Ser. No. 11/585,752, now U.S. Pat. No. 7,948,448, which was filed on Oct. 24, 2006, and entitled "Portable Presentation System And Methods For Use Therewith," which claims the benefit of U.S. provisional patent No. 60/771,908, which was filed on Feb. 9, 2006, and entitled "Virtual Flip Chart Method And Apparatus." U.S. patent application Ser. No. 11/585,752, now U.S. Pat. No. 7,948,448, is also a continuation in part of U.S. patent application Ser. No. 11/446,019, which was filed on Jun. 2, 2006, and entitled "Virtual Flip Chart Method And Apparatus," which claims the benefit of U.S. provisional patent No. 60/687,389, which was filed on Jun. 2, 2005, and entitled "Virtual Flip Chart Method And Apparatus," and U.S. provisional patent application No. 60/771,908, which was filed on Feb. 9, 2006, and entitled "Virtual Flip Chart Method And Apparatus." U.S. patent application Ser. No. 11/446,019 is also a continuation in part of U.S. patent application Ser. No. 11/096,969, which was filed on Apr. 1, 2005, and entitled "Virtual Flip Chart Method And Apparatus," which is a continuation in part of U.S. patent application Ser. No. 10/816,537, now U.S. Pat. No. 7,834,819, which was filed on Apr. 1, 2004, and entitled "Virtual Flip Chart Method And Apparatus." All of the above are incorporated herein by reference.

STATEMENT REGARDING FEDERALLY SPONSORED RESEARCH OR DEVELOPMENT

Not applicable.

BACKGROUND OF THE INVENTION

The present invention is related to interfaces for large scale presentation systems and more specifically to interface features that enable conference attendees to readily and intuitively share information within a conference space and/or remotely.

The parent applications to this application that are referenced above and that are incorporated herein by reference teach a plurality of conferencing systems, at least some of which include a master presentation unit and one or more slave presentation units that can be set up within a conference space (i.e., a conference room) for sharing information.

In at least some of the embodiments, the master unit includes a large scale flat panel display, a sensor system and a display processor. The processor presents information via the display such as interfaces for software applications, pictures, video, electronic whiteboard images, etc. The processor is linked to the sensor system for receiving information indicative of user activity adjacent/on the display screen and for performing functions associated with the received information and the nature of the activity. For example, where a system operator (i.e., a conference presenter) uses a mechanical stylus as a pen device to draw on the screen, the processor may be programmed to provide virtual ink markings that follow movements of the stylus tip. Similarly, where an application interface is provided on the screen that includes selectable button icons, the processor may be programmed to sense when the stylus is used to contact the screen at a location corresponding to the button icon and may then cause an activity associated with selection of the icon to be performed.

The slave presentation units are also large scale units that include some type of presentation surface that is typically as large or larger than the master unit display screen. The slave units are meant to be positioned adjacent the master unit for viewing by persons within the conferencing space. In at least some inventive embodiments a master unit operator can use the master unit to indicate that information presented via the master unit should be presented via one of the slave units. When an operator indicates that master unit information should be displayed via one of the slave units, the master unit information is so displayed. Thus, the master-slave system is, in at least some respects, akin to a conventional paper based flip chart where the master unit is useable to create and modify images and the slave units are usable to display images of interest after the images are created.

In at least some embodiments the slave units include one or more projectors, each projector projecting one or more slave images on a slave presentation surface. In at least some embodiments two or more master/slave sub-systems can be linked via a network so that conference attendees in remote locations can all simultaneously view the same images.

BRIEF SUMMARY OF THE INVENTION

At least some embodiments include a method for configuring electronic presentation units for cooperative activities, the method comprising the steps of providing a plurality of presentation units in a conferencing space including a master unit and other units, electronically identifying the other units present in the conferencing space, enabling a configuration interface for identifying a sub-set of the other units as slave units, receiving input via the configuration interface identifying the slave unit sub-set and enabling a control interface for transferring images from the master unit to each of the slave units in the selected sub-set.

In some cases the step of providing a plurality of presentation units including a master unit and other units includes providing a plurality of units, enabling at least one initial interface for identifying the master unit and receiving a designation via the initial interface identifying the master unit from among the plurality. In some cases each of the presentation units includes a display screen and the step of enabling the initial interface includes providing a selectable icon via at least one of the unit screens that is selectable to indicate that the unit is the master unit.

In some cases the step of providing presentation units includes providing electronic presentation units that each include a wireless transmitter, the step of identifying the other presentation units in the conferencing space including causing the other units in the space to transmit unique identifiers to the master unit. In some cases the step of causing the other units to transmit includes transmitting a polling signal from the master unit to the other units that causes the other units to transmit the unique identifiers to the master unit. In some cases at least the master unit includes a display screen, the step of enabling a configuration interface for identifying a sub-set of the other units as slave units including presenting a separate selectable icon for each of the other units via the master unit display screen and monitoring for the selected subset.

In some cases the step of enabling a control interface includes enabling at least one transfer tool for each of the

selected slave units wherein, when a transfer tool associated with one of the slave units is selected, the image displayed via the master unit is transmitted to the associated slave unit and is displayed. In some cases the master unit includes a display screen and wherein each of the initial interface, the configuration interface and the control interface are provided via the master unit.

In some cases the step of identifying the other units includes transmitting a polling signal from the master unit that causes the other units to transmit identifying information back to the master unit, the step of providing a configuration interface including uniquely identifying each of the other units via the master display screen. In some cases each of the units includes a display screen, the step of enabling a configuration interface including displaying a unique identifier associated with each of the other units, the method further including causing each of the other units to display the associated unique identifier via the other units display screen.

In some cases each of the units includes a display screen, the step of enabling a control interface including displaying a unique identifier associated with each of the selected units, the method further including causing each of the selected units to display the associated unique identifier via the selected units display screen. In some cases the master unit includes the control interface and wherein the unique identifiers are presented via the master unit display screen and are selectable for transferring images from the master display to the slave displays associated with the unique identifiers. In some cases the step of enabling a configuration interface for identifying a sub-set of the other units as slave units includes enabling the interface on the master unit.

Other embodiments include a method for configuring electronic presentation units for cooperative activities, the method comprising the steps of providing a plurality of presentation units in a conferencing space including a master unit and other units wherein each of the presentation units includes a display screen, electronically identifying the other units present in the conferencing space, enabling a configuration interface for identifying a sub-set of the other units as slave units, receiving input via the configuration interface identifying the slave unit sub-set and enabling a control interface for transferring images from the master unit to each of the slave units in the selected sub-set.

In some cases each of the display screens includes a large flat panel display screen. In some cases each of at least a subset of the presentation units is portable and wherein the step of providing a plurality of presentation units includes moving at least a subset of the presentation units into the conferencing space.

Yet other embodiments include a system for facilitating cooperative activities, the system comprising a plurality of presentation units in a conferencing space including a master unit and other units wherein each of the presentation units includes a display screen, a processor programmed to perform the steps of identifying the other units present in the conferencing space, enabling a configuration interface for identifying a sub-set of the other units as slave units, receiving input via the configuration interface identifying the slave unit sub-set and enabling a control interface for transferring images from the master unit to each of the slave units in the selected sub-set.

BRIEF DESCRIPTION OF THE SEVERAL VIEWS OF THE DRAWINGS

FIG. **1** is a perspective view of an exemplary flipchart mimicking system according to one embodiment of the present invention including a master presentation unit and first and second slave presentation units;

FIG. **2** is an enlarged perspective view of the master presentation unit of FIG. **1**;

FIG. **3** is a schematic partial cross sectional view of the master unit of FIG. **2**;

FIG. **4** is a perspective view of one of the slave units of FIG. **1**;

FIG. **5** is a schematic partial cross sectional view of the slave presentation unit of FIG. **4**;

FIG. **6** is a perspective view of a second embodiment of a slave unit that may be used with the master unit of FIG. **1**;

FIG. **7** is a view similar to the view of FIG. **5**, albeit illustrating another exemplary slave presentation unit design;

FIG. **8** is a similar to FIG. **7** albeit illustrating one additional slave presentation unit;

FIG. **9** is similar to FIG. **7** albeit illustrating yet one more slave presentation unit embodiment;

FIG. **10***a* is a perspective view of a handheld interface unit shown in FIG. **1**;

FIG. **10***b* is a schematic view of components that make up one embodiment of the interface unit of FIG. **10***a;*

FIG. **11** is similar to FIG. **1**, albeit illustrating a system that includes a different type of slave presentation unit;

FIG. **12** is similar to FIG. **1**, albeit illustrating slave presentation units that include flat panel displays;

FIG. **13** is a flowchart illustrating a flipping method according to one aspect of the present invention that may be used with any one of the systems shown in FIGS. **1** through **12**;

FIG. **14** is a sub-process that may be substituted for a portion of the method illustrated in FIG. **13** for retrieving images from a slave unit and re-presenting the images via the master unit;

FIG. **15** is a method for flipping images from a master unit to a slave unit and thereafter retrieving an image from a slave unit where the slave unit is uniquely identifiable;

FIG. **16** is a flowchart illustrating a method whereby images currently displayed via a master presentation unit and slave presentation units may be quickly stored and subsequently re-accessed and re-presented via the same units on which the images were presented prior to being saved;

FIG. **17** is similar to FIG. **2**, albeit illustrating a master unit that includes a different compliment of control buttons;

FIG. **18** is a plan view of a system consistent with certain aspects of the present invention including a single presentation unit that divides surface space into a plurality of presentation surfaces that can be used to mimic flip chart activity;

FIG. **19** is similar to FIG. **18**, albeit illustrating a different system wherein presented images are managed in a different manner;

FIG. **20** is a perspective view of another inventive embodiment including three projectors and associated projection screens/assemblies;

FIG. **21** illustrates yet another embodiment where a master unit is in the form of an easel assembly and slave units are wall mounted;

FIG. **22** is a schematic illustrating a system where an interface unit is used to remotely control a presentation using remotely located master and slave units;

FIG. **23** is a schematic diagram illustrating one additional exemplary inventive system including a single projector that projects a main image and two flipped images;

FIG. **24** is a schematic diagram illustrating another exemplary system including multiple portable flat panel displays where one of the displays can be selected as a master display and the others or a subset there are used as slave display;

FIG. **25** is a flow chart illustrating another method according to at least some aspects of the present invention;

FIG. **26** is similar to FIG. **24**, albeit illustrating the system after one of the portable units has been selected as a master unit;

FIG. **27** is similar to FIG. **26**, albeit wherein the system is shown after slave units have been selected;

FIG. **28** illustrates another embodiment including a single flat panel display portable unit and multiple projectors for projecting flipped images;

FIG. **29** is a schematic view of a system including two subsystems like the configuration of FIG. **28** that are linked by a wide area network;

FIG. **30** is a schematic diagram of a system like the system illustrated in FIG. **28** wherein a flat panel display is mounted for rotation between a portrait orientation and a landscape orientation, in FIG. **30** the display is shown in the portrait orientation;

FIG. **31** is similar to FIG. **30**, albeit illustrating the system where the display is in the landscape orientation;

FIG. **32** is a schematic diagram of a 16:9 aspect ratio screenshot in a portrait orientation that may be presented via a master unit according to at least one embodiment of the present invention;

FIG. **33** is a schematic view of four slave images that may be presented via a slave presentation space according to at least some aspects of the present invention;

FIG. **34** is a schematic diagram of a screenshot that may be provided via one of the laptop computers illustrated in FIG. **29**;

FIG. **35** is a schematic diagram illustrating the tool area of FIG. **32** in greater detail;

FIG. **36** is a schematic diagram similar to the diagram of FIG. **32**, albeit illustrating additional information provided in a workspace area;

FIG. **37** is similar to FIG. **32**, albeit illustrating an initial image in a reduced size and additional information added to a workspace area;

FIG. **38** is a schematic diagram similar to the diagram of FIG. **32**, albeit illustrating an activity corresponding to movement of some of the information from a workspace area to a panel icon;

FIG. **39** is similar to FIG. **38**, albeit illustrating an image in a workspace area to which information has been moved;

FIG. **40** is a schematic diagram similar to the diagram of FIG. **32**, albeit illustrating a 16:9 aspect ratio screenshot after a display unit has been rotated from a portrait orientation to a landscape orientation;

FIG. **41** is similar to FIG. **33**, albeit illustrating slave images in a landscape orientation;

FIG. **42** is a schematic diagram similar to the diagram of FIG. **32**, albeit illustrating a 4:3 aspect ratio screenshot in a portrait orientation;

FIG. **43** is similar to FIG. **42**, albeit illustrating a 4:3 aspect ratio screenshot in a landscape orientation;

FIG. **44** is a schematic illustrating another exemplary tool area similar to the area illustrated in FIG. **35** as well as six slave presentation spaces associated with panel icons at the tool area;

FIG. **45** is similar to FIG. **44** albeit illustrating the tool area and associated slave presentation spaces in a different state;

FIG. **46** illustrates the tool area of FIG. **44**, albeit in a different state;

FIG. **47** is similar to FIG. **44**, albeit illustrating the tool area and slave presentation spaces in another state;

FIG. **48** is similar to FIG. **46**, albeit illustrating the tool area in another state.

FIG. **49** is similar to FIG. **44**, albeit illustrating a tool area and slave presentation spaces in yet another state;

FIG. **50** illustrates another version of the tool area of FIG. **44** that includes both primary and secondary slave representation areas as well as two different sets of slave presentation spaces corresponding to two linked remote systems according to at least some inventive embodiments;

FIG. **51** illustrates a tool area, albeit including a relatively larger slave representation area;

FIG. **52** is a screen shot including a print window according to at least some inventive embodiments;

FIG. **53** is a flowchart illustrating a method for identifying printing devices associated with networked computer devices;

FIG. **54** is a flowchart illustrating a print method according to at least some inventive embodiments;

FIG. **55** is a schematic illustrating a room wizard that facilitates distribution of electronic copies of session images;

FIG. **56** is a flowchart illustrating a method for identifying and storing e-mail addresses of conference participants;

FIG. **57** is a flowchart illustrating a method for sending electronic versions of session images to conference attendees;

FIG. **58** is a prospective view of an exemplary portable and self-contained conference presentation unit;

FIG. **59** is similar to FIG. **58**, albeit illustrating another portable embodiment;

FIG. **60** is a schematic diagram illustrating a display unit, a light sensing device, a wireless receiver and illustrating a method for facilitating interaction with a display surface where interactivity is a function of the object used to interact with the surface;

FIG. **61** is a help feature according to at least some inventive embodiments;

FIG. **62** is a schematic illustrating a master unit screenshot and a plurality of slave presentations spaces where a help function is employed;

FIG. **63** is a schematic illustrating a system where projector brightness control is facilitated via a master unit screenshot;

FIG. **64** is a schematic of a system wherein a master unit screenshot is used to control room or environmental apparatus;

FIG. **65** is a screen shot that illustrates several additional features that may be implemented via a master presentation unit;

FIG. **66** is similar to FIG. **65**, albeit illustrating additional features and aspects of at least some embodiments;

FIG. **67** is a schematic of a tool area akin to the area illustrated in FIG. **44**, albeit under different conditions;

FIG. **68** is similar to FIG. **67**, albeit under different conditions;

FIG. **69** is similar to FIG. **67**, albeit under yet another set of conditions;

FIG. **70** is a perspective view of a credenza that includes a projector assembly according to at least one inventive embodiment;

FIG. **71** shows the credenza assembly of FIG. **70** where a top member and door members have been removed;

FIG. **72** shows the credenza assembly of FIG. **70** from the side and adjacent a wall structure where a projector assembly is shown in phantom;

FIG. **73** is a screen shot similar to the image in FIG. **65**, albeit where a frame or boundary line is shown in phantom that is used to determine when an image displayed in a workspace should be reduced in size to enable a user to add additional information along the peripheral edge of the image;

FIG. **74** is a screen shot similar to the image in FIG. **73**, albeit where the image presented in a workspace has been reduced in size to enable a user to add additional information to the image at the peripheral edges;

FIG. **75** is a schematic illustrating a reduced size image and a shifting activity that can help a user realign a stylus tip with a recent image altering activity so that the activity can be continued;

FIG. **76** is a schematic similar to FIG. **75**, albeit where the reduced size image has been shifted to align with a stylus tip;

FIG. **77** is a screen shot illustrating a notes summary page that is consistent with at least some contemplated embodiments;

FIG. **78** is a schematic illustrating an exemplary wireless portable kit system according to another embodiment of the invention;

FIG. **79** is a perspective view of one of the portable projector carts of FIG. **78**;

FIG. **80** is similar to FIG. **79**, albeit showing one of the doors of the cart in a closed position;

FIG. **81** is a side perspective view of the cart of FIG. **79**, albeit with the doors in the closed position;

FIG. **82** is a perspective view of the portable podium assembly of FIG. **78**;

FIG. **83** is a schematic view showing various components of the podium assembly of FIG. **78**;

FIG. **84** is a method that may be performed using the system of **78**;

FIG. **85** is a subprocess that may be substituted for one of the method steps in the method of FIG. **84**;

FIG. **86** is a schematic illustrating another kit assembly similar to the assembly of FIG. **78**, albeit including hardwire cables connecting the system components together;

FIG. **87** is a partial side view of one of the carts of FIG. **86**;

FIG. **88** is a partial perspective view of the power/data/video connector cable shown in FIG. **87**;

FIG. **89** is a schematic showing yet another kit system similar to the kit system of FIG. **78**;

FIG. **90** is a schematic view showing how the components of the system in FIG. **89** are connected;

FIG. **91** shows one of the jumper cable assemblies of FIG. **90**;

FIG. **92** is similar to FIG. **91**, albeit showing a different embodiment of the jumper cable assembly

FIG. **93** is a perspective view of a set of portable projector carts that are locked or secured together via clasps type assemblies; and

FIG. **94** is a subprocess that may be substituted for one of the steps in FIG. **84**.

DETAILED DESCRIPTION OF THE INVENTION

While the present invention may be embodied in any of several different forms, the present invention is described here with the understanding that the present disclosure is to be considered as setting forth exemplary embodiments of the present invention which are not intended to limit the invention to the specific embodiment(s) illustrated.

Referring now to the drawings wherein like reference characters represent similar elements throughout the several views and, more specifically, referring to FIG. **1**, while the system components to be described may be used in any space to present information to an audience and/or to facilitate collaborative activity between a system operator and an audience, in order to simplify this explanation, the systems and components will be described in the context of an exemplary conference room **11** including a presentation wall **12** generally located at a front end of the conference room **11**, a door **14** for entering and exiting the conference room **11** and a plurality of conference tables or desks, two of which are identified by numerals **16** and **18**, respectively. The tables **16** and **18** are arranged as are seats (not illustrated) within room **11** so as to orient audience members within room **11** to easily observe information presented to the audience at the front of room **11** adjacent wall **12**.

In at least some embodiments of the present invention, an elongated horizontal rail **40** is mounted to wall **12** at approximately 6 to 7 feet above the floor within room **11** for either temporarily or permanently supporting master and slave presentation units adjacent wall **12**. Referring also to FIG. **3**, rail **40** has a height dimension H**1** and a width W**1** that are perpendicular to the length of rail **40** and forms a horizontal top surface **41**. Rail **40** may be mounted to wall **12** in any secure manner including bolts or the like and is held off the surface of wall **12** such that distal ends (e.g., **74** in FIG. **3**) of presentation unit mounting members to be described in greater detail below fit between the wall and a rear surface of rail **40**.

Referring still to FIG. **1**, an exemplary first system **10** includes a master presentation unit **28** and first and second slave presentation units **22***a* and **22***b*, respectively. As illustrated in FIG. **1**, each of the presentation units **28**, **22***a*, **22***b*, etc., are mounted to and hang from rail **40** adjacent wall **12** so that front presentation surfaces (generally identified by numeral **48** or numeral **48** followed by a lower case letter) are easily observable by an audience within room **11**. Referring also to FIGS. **2** and **3**, master presentation unit **28** is an electronic image-forming device which, in the illustrated embodiment, includes a flat plasma or liquid crystal type display screen **48** mounted within a rigid generally rectilinear and relatively thin plastic or metal housing assembly **52**, a transceiver **20** and first and second mounting hooks or members **72**, **74**, respectively.

Referring also to FIG. **3**, housing **52** includes oppositely facing front and rear surfaces **53** and **55**, respectively. Front surface **53** forms an opening **57** in which screen **48** is mounted so that a front surface **54** thereof having a width dimension W**2** and a height dimension H**2** is observable. Mounting members **72** and **74** extend from opposite lateral upper corners of rear surface **55** and extend downwardly at distal ends thereof so as to form channels **17** and **19** between rear surface **55** and facing surfaces of the distal ends (one of the facing surfaces identified by numeral **59** in FIG. **3**). Each channel **17**, **19**, has a recess dimension R**1** which is substantially similar to width dimension W**1** of rail **40** (see FIG. **3**).

To mount master unit **28** to rail **40**, as best illustrated in FIGS. **1** and **3**, unit **28** is lifted and positioned with respect to rail **40** such that the channels formed by members **72** and **74** are above rail **40**. Thereafter, unit **28** is lowered until sections of rail **40** are received within the channels formed by members **72** and **74** and so that members **72** and **74** are generally supported on the top rail surface **41** (see FIG. **3**).

Although not illustrated, one or more additional extension member may be provided that extends from rear surface **55** proximate the bottom end thereof to contact the wall **12** surface and stabilize unit **28** in a substantially vertical orientation.

Referring again to FIG. **3**, in addition to the components described above, exemplary master presentation unit **28** includes a processor **80**, a keyboard or other type of control interface **30** (i.e., the keyboard is not necessary where interactivity is provided via other means such as selectable on-screen icons, etc.) and a digital memory **88**. Processor **80** and memory **88** are mounted within cavity **61** formed by housing **52** while keyboard **30** includes keys supported by the housing structure. Processor **80** is linked to each of transceiver **20**, display screen **48**, keyboard **30** and memory **88** via a plurality of data busses (not labeled). Generally, transceiver **20** is capable of transmitting and receiving information via any of several different wireless technologies (e.g., RF, infrared, etc.) and via any of several different wireless communication protocols (e.g., 802.11b, Bluetooth, etc.) within the vicinity of transceiver **20** (e.g., within the space defined by a conference room **11**).

Memory **88** is a digital memory device and includes a plurality of different types of information usable by processor **80** to perform various methods. Generally, the information stored in memory **88** takes two forms including programs run by processor **80** and data such as images presented via display screen **48**. Programs run by processor **80** include, in at least some cases, position sensing programs for sensing the position of virtual ink pens and virtual ink type eraser devices used to add information to and delete information from screen **48** as well as display driver programs for presenting information via display **48**.

In addition, memory **88** includes programs used to manage images present via display **48**. For instance, in at least some embodiments of the present invention, a program in memory **88** may assign unique identifier numbers or the like to each image flipped from unit **28** to one of the slave presentation units and may store each flipped image and corresponding identifier number within memory **88** for subsequent access. As another instance, when an image is flipped to a specific one of the slave presentation units, the master unit processor **80** may be programmed to correlate and store the flipped image with a unit identifier that uniquely identifies the slave unit to which the image is being flipped. After an identifier and an image is stored in memory **88**, the image may be accessed via reference to the unique identifier.

Moreover, in at least some embodiments of the present invention, copies of conventional software applications such as PowerPoint, various spread sheet applications, CAD applications, word processor applications, internet browser applications, etc., may be stored within memory **88** for access and running by processor **80**. Here, it should be appreciated that, in at least some embodiments of the invention, conventional software applications may not be useable with system **10** and in that case, copies of the conventional software applications would not be stored in memory **88**. Moreover, it should be appreciated that, in at least some embodiments of the invention, software applications such as PowerPoint, spreadsheets and the like may be stored in or accessed via a palm or laptop type computer useable with master presentation unit **28** so that, while processor **80** is used to display images corresponding to conventional software applications, processor **80** itself does not run the software applications. Here, the computer would run the programs and provide information to processor **80** to drive the display **48**.

Referring still to FIG. **3**, control interface **30** may include various types of input devices. For instance, in at least some embodiments of the invention, it is contemplated that mechanical hardware type buttons like the keys illustrated in FIG. **2** may be provided within the front surface **53** of housing **52** for providing commands to processor **80** such as flip commands (i.e., commands that indicate that an image currently on display **48** should be transmitted to slave presentation units and then removed from display **48**) and other data access and program control commands. In the alternative, or in addition to hardware type buttons, in at least some embodiments of the invention, it is contemplated that touch selectable icons may be provided on display screen **48** for selection by a system operator which, when selected, provide command signals to processor **80** to perform processes. In some cases the input device **30** may include image augmentation capabilities (i.e., be in part an augment interface) so that marks can be added to an image on screen **48** or deleted. To this end, see U.S. patent application Ser. No. 10/452,178 which was filed on Jun. 2, 2003 that is entitled "Electronic Whiteboard" and which is incorporated herein in its entirety by reference. In the alternative, in at least some embodiments of the invention, input to master unit **28** may always be via a palm or laptop type computing device (e.g., a portable control interface) where commands to processor **80** are received via transceiver **20**.

Hereinafter, unless indicated otherwise, in order to simplify this explanation, it will be assumed that the master unit **28** includes a mechanical type keyboard **30**. In addition, unless indicated otherwise, palm and laptop computers and control devices will be referred to generally as hand held devices (HHDs). Moreover, while unit and device communication may be wired, it will be assumed here that all unit and device communication is via a wireless protocol and transceivers (e.g., **20** in FIG. **2**).

Referring once again to FIGS. **1** and **2**, exemplary master unit keyboard keys include a resume key **56**, a send or Flip key **58**, a store key **60**, a retrieve key **62**, a left send key **68**, a right send key **70**, and a number pad **67**. The selectable keys described and illustrated herein are only exemplary and, in many cases, additional selectable keys or a subset of the keys described herein may be provided via display **48**, the selectable key set being dependent upon the functions supported by the system **10** and, in at least some cases, the relative juxtaposition of system components. In addition, where conventional software programs are run by processor **80** or where display **48** is used as a large display for an HHD running conventional software programs, mouse or touch selectable icons required to support the software applications may appear on display **48**.

Referring still to FIGS. **1** and **2**, in at least some cases, it is contemplated that master presentation unit **28** may be positioned to one side of the slave presentation units **22***a*, **22***b*, etc. relative to an audience viewing the units within room **11**. In this case, to flip an image from display **48** to one of the slave presentation units **22***a*, **22***b*, etc., there must be some way to specifically identify the slave unit to receive the flipped image. In the exemplary embodiment described herein, unique slave unit identifiers "**1**" and "**2**" are provided on each one of the slave units **22***a*, **22***b*, etc., which are easily viewable by a system operator when the operator is in a position to facilitate collaborative activity by interacting

with master unit **28**. In FIG. **1**, the unit identifiers "**1**" and "**2**" are permanently printed at one end of each of the unit housing assemblies.

In the present example, processor **80** is programmed to monitor keyboard **30** for an indication that the image on display **48** is to be flipped to one of units **22***a* or **22***b*. In this case, it is contemplated that, to flip an image to one of units **22***a* or **22***b*, a system operator uses number **67** to select the unit identifier number corresponding to the unit to which the image is to be flipped and subsequently selects send key **58**. For example, to flip an image from display **48** to unit **22***a*, the operator uses pad **67** to select number "1" and then selects key **58**. Similarly, to flip an image to unit **22***b*, the operator selects number "2" from pad **67** and subsequently selects send key **58**.

Here, it is assumed that each separately addressable slave units and also, in some embodiments, master unit **28**, has a unique network address that can be used to send data thereto. For instance, in FIG. **1**, slave units **22***a* and **22***b* may be assigned unique wireless addresses "XP45519784" and "QZ1433217", respectively, while master unit **28** is assigned address "AM7966142". The addresses of slave screens are correlated with the unique salve unit identifiers (e.g., "**1**" and "**2**" in the present example) and the correlated addresses and identifiers are stored in master unit memory **88**. In addition, processors in each of the slave units **22***a*, **22***b*, etc., are programmed to monitor for and receive wireless signals sent to their respective network addresses. When a slave unit is selected as a target for a flipped image, processor **80** identifies the network address associated with the target slave unit, generates an image data packet including the image and the address of the target slave unit, transmits the data packet to the selected slave unit and then, in at best some embodiments, erases the image from display **48** (i.e., blanks display **48**) or otherwise renders the image un-observable via display **48** to provide a clean and clear surface **48** in a manner that mimics a conventional paper pad type flip chart. In other embodiments a second affirmative step may be required to render the master image un-observable.

In at least some embodiments of the present invention, master presentation unit **28** is also useable to retrieve images presented via the slave presentation units **22***a*, **22***b*, etc., so that those images can be edited and then re-presented via the slave units in the edited form. To this end, referring still to FIGS. **1** through **3**, when an image is flipped from master unit **28** to one of the slave units **22***a*, **22***b*, etc., in at least some inventive embodiments, the image data received by the slave unit is temporarily stored in a slave unit memory (see **119** in FIG. **5**).

After an image is presented via a slave unit, if a system operator wants to edit that image, in a manner similar to the manner described above for flipping an image to unit **22***b*, the system operator uses number pad **67** to select the identifier number corresponding to the slave unit and then selects retrieve key **62**. When retrieve key **62** is selected, master processor **80** forms a retrieve data packet including an image retrieve request and the address of the slave unit from which to retrieve the image and wirelessly transmits the retrieve data packet to the slave unit. In response, the slave unit generates an image data packet including the slave image and the network address of the master unit and transmits the image data packet back to the master unit **28**. When unit **28** receives the image data packet, master unit **28** re-presents the image via display **48** for further collaborative viewing/editing.

Instead of accessing slave images from slave unit memories as described above, in at least some inventive embodiments, when master unit **28** flips an image to a slave unit, the image may be correlated with and stored with the unique slave unit identifier in master unit memory **88**. Thereafter, when an operator wants to re-present a slave image via master unit **28** for editing or the like, the operator can select the appropriate slave unit identifier (i.e., the identifier number associated with the slave unit presenting the image to be re-accessed) via number pad **67** followed by retrieve key **62** causing processor **80** to access the previously stored image in memory **88** and present the image via display **48**.

Referring yet again to FIGS. **1** through **3**, according to at least one aspect of the present invention, during a presentation or collaborative activity, after images are presented via one or more of the presentation units **28**, **22***a*, **22***b*, etc., if an operator wishes to cease a presentation with the intention of continuing the presentation at a later time, a function is provided whereby the operator can quickly store all of the images currently presented via the presentation units such that, upon resuming the presentation or collaborative activity, all of the currently presented images can be quickly and immediately re-presented via the presentation units in the same relative juxtapositions. To this end, processor **80** may be programmed to monitor store key **60** and, when icon **60** is selected, may correlate each of the unique presentation unit identifiers (e.g., "**1**", "**2**", etc., an identifier uniquely associated with master unit **28**, etc.) with the image currently displayed by the corresponding presentation unit as an image-unit set and then to store the image-unit set in memory **88**. Thereafter, to re-present the images via the master and slave units at a subsequent time, the operator may select resume key **56** after which processor **80** accesses the image-unit set and re-presents those images via the master and slave units.

Here, when an image-unit set is stored or is re-accessed, processor **80** may be programmed to enable the operator to uniquely identify the image-unit set by providing a name therefore useable to recognize the specific image-unit set. In this case, more than one image-unit set may be stored in memory **88** and subsequently unambiguously retrieved to resume presentations.

While images may be stored with unit identifiers, it should also be appreciated that similar results can be achieved by storing images along with network addresses when store key **60** is selected. Here, when a session is resumed, processor **80** simply accesses the stored images and addresses and flips the images to the correlated addresses without having to perform the intermediate step of correlating the unit identifiers and addresses.

In at least some embodiments it is contemplated that the number of slave units used with a master unit will not change and that keys dedicated to specific slave units and functions may be provided on keyboard **30**. For instance, where a system **10** only includes one master unit **28** and two slave units **22***a* and **22***b*, separate send and retrieve keys for each of the slave units **22***a* and **22***b* may be provided so that single key selection can cause image flipping/retrieving. Similarly, referring once again to FIG. **1**, in at least some cases, it is contemplated that a master unit **28** may be positioned between two slave units (i.e., master unit **28** and slave unit **22***a* would be swapped so that unit **28** is between slave units **22***a* and **22***b*). In this case, simple left and right send icons **68** and **70**, respectively, may be used to flip images from master unit **28** to the slave units to the left and right of the master unit, respectively. Although not illustrated, simple left and right retrieve arrow icons similar to

icons **68** and **70** may also be provided for retrieving images from the slave units to be re-presented via screen **48**.

Referring once again to FIG. **1**, in at least some embodiments of the present invention, each of the slave presentation units **22***a* and **22***b* will have a similar construction and similar operation and therefore, in the interest of simplifying the present explanation, only unit **22***a* will be described here in detail. Referring also to FIGS. **4** and **5**, slave presentation unit **22***a* is a pull-out, roller window shade style unit and includes a housing assembly **100** (hereinafter housing **100**), a transceiver **34***a*, a rollable and unrollable presentation screen **38***a*, first and second mounting members or hooks **102** and **104**, respectively, a processor **110**, a motor **112**, a powered screen spindle **114**, a slave presenter/print applicator that takes the form of a printer **116** in the present example, an eraser **118** and a memory **119**. Housing **100** is generally a rigid box shaped assembly that forms a cavity **105** between top and bottom walls **107** and **109**, respectively, and front and rear walls **111** and **113**, respectively. The front wall **111** and rear wall **113** form opposite facing front and rear surfaces **101** and **103**, respectively. Bottom wall **109** forms a slit or opening **122** generally along the length of housing **100** through which a lower end of screen **38***a* extends. Each of mounting members **102** and **104**, like mounting members **72** and **74** that are secured to master unit housing **52**, are secured to an extend rearwardly from the rear surface **113** of housing **100** and extend from opposite ends of housing **100**. The distal ends of each of members **102** and **104** extend downwardly such that member **102** forms a channel **117** and member **104** forms a channel **115** having a channel dimension R**2** which is similar to the width dimension W**1** of rail **40**. Thus, as in the case of main unit **28**, slave unit **22***a* is mountable to rail **40** by placing members **102** and **104** over rail **40** so that rail **40** is received within channels **115** and **117**.

Transceiver **34***a* is mounted to top wall **107** and extends upwardly therefrom. Screen **38***a*, in at least some embodiments of the present invention, is a flexible and rollable generally rectilinear member that, when unrolled, extends through opening **122** and there below to provide a presentation surface **48***a* that faces in the same direction as front surface **101** of housing **100**. In at least some embodiments, presentation surface **48***a* is a writable/erasable surface such as Mylar (trademarked name of a polyester material developed and sold by DuPont) or the like on which erasable ink can be printed or plotted and can subsequently be erased. In some cases, a weighted bar **106** may be mounted to a distal lower end of screen **38***a* that helps to maintain screen **38***a* substantially flat when screen **38***a* is unrolled and extends below housing **100**.

In the illustrated embodiment each of processor **110**, motor **112**, spindle **114**, printer **116** and eraser **118** is mounted within housing cavity **105**. Processor **110** is linked to each of motor **112**, printer **116** and eraser **118** for controlling each of those components. Processor **110** is also linked to memory **119** for accessing information therein and is linked to transceiver **34***a* to send and receive data packets. Motor **112** is linked to spindle **114** for rolling and unrolling slave screen **38***a* which is attached at a top end to spindle **114**.

Processor **110** controls printer **116** to, when an image is flipped to slave unit **22***a* from master unit **28**, print the image on presentation surface **48***a* either as screen **38***a* is being unrolled or, in the alternative, by moving one or more printer heads adjacent to the surface **48***a* while moving screen **38***a* up and down via spindle. In any event, processor **110** controls printer **116** to provide a rendition of the image flipped to unit **22***a* from master unit **28**. In some cases the rendition will be in color while in other cases it may be in black and white. In still other cases the user may have the option to print in color or in black and white.

Eraser **118** is controlled by processor **110** to erase ink applied by printer **116** to presentation surface **48***a*. To this end, eraser **118** may simply move back and forth along the length of housing **100** while holding an eraser pad on surface **48***a* as screen spindle **114** rolls up screen **38***a*. In the alternative, processor **110** may be able to control eraser **118** to erase certain information from surface **48***a* while leaving other information on surface **48***a*. Here, for instance, where a system operator re-accesses an image from slave unit **22***a* to be edited via master unit **28**, if the edit simply entails erasing a distinct part of the image via unit **28** and then re-flipping the modified image back to unit **22***a*, the modified image may be presented via unit **22***a* by erasing the appropriate information from surface **48***a* and unrolling screen **38***a* so that the modified image is viewable via surface **48***a*.

Thus, in the embodiment illustrated in FIGS. **1** through **5**, when an operator indicates that an image on master screen display **48** is to be flipped to unit **22***a*, the image data packet is transmitted via transceiver **22** to processor **110** via transceiver **34***a* after which processor **110** controls motor **112** and printer **116** to simultaneously unroll screen **38***a* and apply ink to surface **48***a* thereby forming the flipped image on surface **48***a*. After an image has been formed on surface **48***a*, if the system operator flips another image to unit **22***a*, processor **110** first controls motor **112** and eraser **118** to roll up screen **38***a* while simultaneously erasing the ink printed thereon. After surface **48***a* has been cleaned, processor **110** next controls motor **112** and printer **116** to again apply ink to surface **48***a* thereby providing the newly flipped image on surface **48***a* for the audience to view.

While it may take some time (e.g., thirty or more seconds) for one of the slave units **22***a* or **22***b* to erase an existing image and to apply ink forming a new image on surface **48***a*, after an image is flipped from master unit **28**, display **48** can be cleared immediately and used to continue the collaborative process. Thus, the delay in generating an image in the manner described above will not delay the collaborative effort.

Referring to FIG. **1**, it should be appreciated that the dimensions of the master display screen **48** and the portion of the slave screen **38***a* that is unrolled and used to present an image are similar such that an image flipped to and presented via screen **38***a* has a scale substantially similar to the scale of the image that was originally presented via display **48**.

Referring still to FIGS. **1** through **5**, it should be appreciated that where the master and slave units **28** and **22***a*, **22***b*, etc., are removable from rail **40**, the entire system described above can be easily transported from one conference room **11** to another and can easily be set up by placing the mounting members that extend from the rear surfaces of the units over a rail in the other conference room similar to rail **40**. During transport, the screens (e.g., **38***a*) of the slave units can be completely rolled up for protection and to provide a compact configuration.

Referring now to FIG. **6**, a second embodiment of a slave presentation unit **120** is illustrated including a top header **122**, a housing **124**, a transceiver **130**, a screen **126** and first and second mounting members **132** and **134**, respectively. Mounting members **132** and **134** are similar in construction and operation to mounting members **102** and **104** described above and therefore will not be described here in detail. Here, it should suffice to say that members **132** and **134**

extend from a rear surface of header **122** for mounting unit **120** to a rail like rail **40** described above.

In this second embodiment, screen **126** is rigidly secured to a lower surface of header **122** and lower housing **124** forms an opening (not illustrated) through which a distal lower end of screen **126** extends and in which a screen spindle similar to spindle **114** described above with respect to FIG. **5** is mounted. In addition, in this embodiment, the processor **110**, motor **112**, printer **116**, memory **119** and eraser **118** described above with respect to FIG. **5** are also mounted within housing **124** and transceiver **130** extends upwardly from housing **124**. Here, when an image is flipped from master unit **28** to slave unit **120**, the image data packet transmitted is received via transceiver **130** and the processor in housing **124** simultaneously controls the motor and printer therein to unroll screen **126** and apply ink to surface **126** forming the flipped image thereon as housing **124** descends (see arrow **128**) below header **122**. An advantage here is that the image can be printed from top to bottom. Similarly, when the image on surface **126** is to be erased, the processor inside housing **124** simultaneously controls the motor and eraser in housing **124** to roll screen **126** up and erase ink from surface **126**.

Referring now to FIGS. **7**, **8** and **9**, three additional embodiments **171**, **173** and **175** of slave units that are similar to the slave unit of in FIG. **5** are illustrated. In FIGS. **7** through **9**, each of the slave units includes a processor **110**, a motor or motivator of some type **112**, a printer **118**, an eraser **116**, a memory (not illustrated), mounting members (e.g., **104**) and a transceiver **34***a* similar to those described above with respect to FIG. **5** and therefore, in the interest of simplifying this explanation, those components are not separately described again here. The primary difference between the embodiments of FIGS. **7**, **8** and **9** and the embodiment of FIG. **5** is in how the presentation screens are extended and retracted.

The embodiment of FIG. **7** is generally a pull-out endless loop style unit and includes both a powered spindle **151** and a freewheeling spindle **148**. Powered spindle **151** is driven by motor **112** under the control of processor **110**. In FIG. **7**, screen **144** is a continuous belt or loop type screen that wraps around powered spindle **151** within housing **100** and extends downward and wraps around freewheeling spindle **148** below housing **100** such that a front screen segment forms a front presentation surface **155** and a rear screen segment forms a rear surface **159** facing in a direction opposite the direction of surface **155**. In at least some embodiments, housing **100** forms two slit like openings **140** and **142** that extend generally along the entire length of housing **100** to allow screen **145** to pass therethrough.

In at least some embodiments, spindle **151** may be powered in either clockwise or counterclockwise direction so that screen **144** can move in either direction up or down as indicated by arrow **146** and so that freewheeling spindle **148** can rotate in either clockwise or counterclockwise directions as indicated by arrow **150**. Here, in at least some embodiments of the present invention, when an image is flipped to unit **171**, processor **110** controls the motor **112** and printer **116** simultaneously to apply ink and form the image on screen **144** as spindle **151** rotates in the clockwise direction. After an image is formed, the image is viewable on front surface **155** between housing **100** and freewheeling spindle **148**. In this case, to erase the image, spindle **151** may be rotated in the counterclockwise direction while eraser **118** removes the ink from screen **144**. In the alternative, to erase an image from front surface **155**, spindle **151** may be rotated in the clockwise direction so that the image rotates about freewheeling spindle **148**, back up toward and around powered spindle **151** and again down past eraser **118** while eraser **118** erases the ink on the screen. In yet one other embodiment that is not illustrated in FIG. **7**, eraser **118** may be positioned on the opposite side of screen **144** within housing **100** and may be used to erase images presented thereto on screen **144** as section **155** is moved up through opening **140**.

Referring to FIG. **8**, exemplary slave presentation unit **173** is a pull-out drop loop style unit and includes a first powered spindle **163** and a second powered spindle **165**, both mounted within housing **100**, as well as a freewheeling spindle **167** wherein first and second ends of a presentation screen **181** are mounted to and rolled around spindles **163** and **165**, respectively, and a central portion of screen **181** wraps around freewheeling spindle **167** that hangs below housing **100**. In this case, the powered spindles **163** and **165** may be used to move a presentation surface **183** of screen **181** either upward or downward as indicated by arrow **146** and about spindle **167** in either direction as indicated by arrow **187**. As in the above slave unit embodiments, a printer **116** and an eraser **118** may be controlled to apply ink to the presentation surface or to remove ink therefrom to reflect image flipping activity caused by interaction with master unit **28**.

Referring now to FIG. **9**, unit **175** is a pull-out accordion style unit similar to the units described above with respect to FIGS. **5**, **7** and **8** except that the spindles are replaced by a take up and let down assembly **174** and the screen, instead of being a rollable screen member, is a segmented accordion type screen **172** including elongated horizontal screen members, two of which are collectively identified by number **189**, that are linked along horizontal elongated edges. Here, motivator **112** is controlled by processor **110** to let out the screen **172** adjacent printer **116** and to take up the screen **172** adjacent eraser **118** as indicated by arrow **170**.

Referring now to FIGS. **1**, **10***a* and **10***b*, an exemplary HHD interface unit **200** includes a generally rectilinear and rigid plastic or metallic housing **199** that protects and supports other unit components including a processor **203**, a display **204**, a keyboard **209** and a transceiver **211**. Processor **203** is linked to each of transceiver **211**, screen **204**, memory **207** and keyboard **209** to receive information therefrom or provide information thereto, where appropriate. Processor **203** runs various programs stored in memory **207**. In addition, in at least some embodiments of the present invention, processor **203** may be able to access a conventional computer network (e.g., a local area network, a wide area network, the Internet, etc.) via wireless communication with access points mounted within or proximate conference room **11**. Communication between wireless devices like unit **200** and a network server via access points is well known in the wireless communication arts and therefore, in the interest of simplifying this explanation, will not be described here in detail.

Keyboard **209** includes hardware keys that are akin to the keyboard keys described above with respect to FIG. **2**. Specifically, mechanical keys **208**, **210**, **216** and **220** are akin to keys **56**, **60**, **62** and **58** described above and can be used to resume a presentation, store images associated with a presentation, retrieve images presented by slave units so they can be re-presented by the master unit **28** and to send images from the master unit **28** to any one of the slave units, respectively. Number pad **214** is used in a manner similar to the number pad **67** described above with respect to FIG. **2**. For instance, to indicate a slave unit associated with iden-

tifier number "2" to which an image should be flipped, an operator selects the "2" key from keyboard **209** followed by the send key **220**.

Left arrow key **222** is a send left key indicating, as its label implies, that an image currently presented via master unit **28** should be sent to a slave unit to the left of master unit **28**. Similarly, right arrow key **228** is a send right key indicating that an image currently displayed by the master unit **28** should be sent to the slave unit to the right of the master unit **28**. Right directed arrow key **223** is a left retrieve key indicating that the image currently presented on a slave unit to the left of master unit **28** should be retrieved to the master unit and displayed thereby. Similarly, left directed arrow key **226** is a right retrieve key indicating that an image currently presented by a slave unit to the right of master unit **28** should be retrieved and displayed via master unit **28**.

In addition to the keys described above, an enter key **212** is provided via unit **200** which can be used to indicate that information entered via other keyboard keys should be acted upon. For example, in cases where a presentation is to be resumed and a specific seven digit number code must be entered to access a specific previously stored image-unit set, after resume button **208** is selected, processor **203** may present a session identification number field via display **204** in which a specific sequence of seven numbers has to be entered in order to access the images corresponding to an image-unit set and present the images via the presentation units. In at least some embodiments of the invention, it is contemplated that unit **200** may include a full keyboard compliment including letters, numbers and function keys that are typically found on a computer keyboard so that unit **200** can, in effect, be used as a complete laptop computer to interact with various software applications (e.g., Power Point, spreadsheet applications, word processor applications, etc.).

Referring still to FIGS. **1** and **10***a*, in at least some embodiments, screen **204** is a fully functional touch sensitive flat panel display screen which can be used to display virtually any type of visual image including images corresponding to software applications, images corresponding to information applied to screen **204** via a stylus **202** or other similar types of interface tools and, in at least some cases, images that combine software generated images and applied information. Thus, for instance, when a Power Point slide is presented on display **204**, in at least some cases, a system operator may use stylus **202** to make a mark (e.g., **229** in FIG. **10***a*) on display **204** which is tracked by processor **203** and in response to which processor **203** changes the image on display **204** so that the mark is represented. Here, the mark is referred to as a virtual ink mark because the mark appears on display **204** despite the fact that no real ink is applied to the surface of screen **204**.

Importantly, according to one aspect of the present invention, the information presented via display **204** of control interface **200** is immediately updated on the master display **48** of unit **28**. Thus, while a system operator may be anywhere within conference room **11** when using HHD **200**, the operator can use HHD **200** to modify the image displayed on display **48** in a real time and collaborative flip chart like manner. After an image on display **48** is completed and when the operator wishes to flip the image from unit **28** to one of the slave units **22***a* or **22***b* in FIG. **1**, the operator uses HHD **200** to flip the image to the appropriate slave unit. For instance, in the example illustrated in FIG. **1**, to flip an image from master unit **28** to slave unit **22***a*, the operator selects the "1" key on HHD **200** followed by send key **220**. After send key **220** is selected, processor **203** forms a flip command data packet commanding an image flip to the selected slave unit and including the master unit network address and transmits the flip command data packet to processor **80** (see again FIG. **3**) via transceivers **211** and **20**. In response to receiving the flip command, processor **80** forms an image data packet including the currently displayed image and transmits the image data packet to the slave unit selected via HHD **200**.

Referring still to FIGS. **10***a* and **10***b* and FIG. **1**, unit **200** may be a stand alone laptop computer and may provide the complete data processing platform where master unit **28** is simply an output and input device. Here, for instance, programs to track interactivity with display **20** may be run by unit **200** and unit **200** may simply provide display driving data to the master unit processor **80**.

In addition, in this case, the unit **200** may completely organize the image presentation and master unit **28** may not perform the flipping and retrieving processes. Here, for instance, unit **200** may store all of the images including the images displayed by the master and slave units. When a presenter indicates via master unit **28** that the master image is to be flipped to a slave unit, the command may be received by unit **200** which in turn causes the flip to occur via transmission of the master image to the designated slave unit. In addition, here, unit **200** may also automatically transmit a command to the master unit to erase the flipped image. Retrieval commands would also be performed via unit **200** as opposed to via the master processor **80**.

Referring now to FIG. **11**, a second exemplary system **230** according to at least some aspects of the present invention is illustrated. System **230** is shown in the context of a conference room like conference room **11** described above with respect to FIG. **1** where presentation units **48** and **232** are mounted on a rail **40** within the room for easy viewing of associated presentation surfaces by an audience. Here, master unit **28** is similar to the master unit **28** described above with respect to FIG. **1** with few differences. With respect to the differences, referring again to FIG. **3**, master unit processor **80** in the FIG. **11** embodiment is programmed slightly differently than the processor described above with respect to FIG. **1**. More specifically, because there is only one slave unit **232** in system **230**, processor **80** is programmed to flip all images to single slave unit **232** when send commands are received.

Second, prior to flipping an image to slave unit **232**, processor **80** is programmed to add an image identifier number to the flipped image which, in the example here, is added to the flipped image in the upper left hand corner. For example, in FIG. **11**, image identifier numbers "6" and "7" are associated with images presented on surfaces **250** and **248**, respectively, and therefore, identifier numbers **6** and **7** have been added to each of the images so that each image can be subsequently uniquely identified.

Third, prior to flipping an image to slave unit **232**, processor **80** correlates and stores the image and the image identifier number in master unit memory **88** for subsequent access. In the above example illustrated in FIG. **11**, master unit processor **80** (see again FIG. **3**) stores the image on surface **250** with identifier number **6** and similarly stores the image on surface **248** with identifier number **7** when each of those images is flipped to slave unit **232**.

Referring still to FIG. **11**, slave presentation unit **232** is a large format printer or plotter that includes a subset of the components or a set of components akin to the components illustrated in FIG. **5**. To this end, unit **232** includes a processor **336**, a motor **338**, a printer **340** and a large roll of paper **342** as well as a transceiver **240**. In the case of unit

232, processor 336 is linked to motor 338, transceiver 240 and printer 340 and, when an image is flipped to unit 232, processor 336 controls motor 338 and printer 340 simultaneously to unroll a portion of the paper roll while applying ink to a front surface 250 thereof as the unrolled portion of the roll drops downward. In addition to applying the image to surface 250, printer 340 applies the image identifier number (e.g., "6" in FIG. 11) in the upper left hand corner of the image.

After an image is printed, the portion of the roll that was let out of unit 232 can be torn off and posted adjacent unit 232 for continuous viewing. To this end, in at least some embodiments, rail 40 may include a corkboard front surface so that tacks can be used to post torn sheets there along. In FIG. 11, an exemplary torn sheet 234 having the number "7" as an identifier number is illustrated as being posted to rail 40 adjacent unit 232. It is contemplated that perforated lines may be provided at spaced locations along the length of the paper roll so that sheets can be torn off in a clean fashion.

In the embodiment illustrated in FIG. 11, in order to re-present one of the images printed by slave unit 232 via master unit 28, referring to FIGS. 2 and 11, a system operator uses number pad 67 to select the number associated with the image to re-present and then selects retrieve key 62. For instance, to re-present the image on sheet 234 in FIG. 11, the operator selects number "7" and retrieve key 62. After key 62 is selected, referring once again to FIG. 3, master unit processor 80 accesses the image stored in memory 88 corresponding to image identifier number "7" and re-presents that image via display 48. Once the image is re-presented, the image may be modified and then re-flipped to slave unit 232 for printing and posting.

Referring now to FIG. 12, yet one additional system 251 according to the present invention as illustrated. Here, the system 251 includes a master presentation unit 48 and first and second slave units 252*a* and 252*b*, respectively. In the illustrated embodiment, master unit 48 is mounted to a rail 40 between slave units 252*a* and 252*b* so that, when viewed from an audience's perspective, unit 252*a* is to the left of master unit 48 and unit 252*b* is to the right of master unit 48.

Master unit 48 is similar to the master units described above and therefore will not be described here in detail. Each of slave units 252*a* and 252*b* is similarly constructed and operates in a similar fashion and therefore, in the interest of simplifying this explanation, only unit 252*a* will be described in any detail. Unit 252*a* includes a hardened, generally rectilinear, plastic or metallic housing 258*a*, a transceiver 254*a* and a large format thin profile plasma, LCD or other thin profile display screen 256*a*. In addition, unit 252*a* also includes a processor and a memory linked thereto, neither of the processor nor memory illustrated. The slave processor is linked to display 256*a* and to slave transceiver 254*a* as well as to the slave memory.

Referring still to FIG. 12, when an image is flipped from unit 48 to slave unit 252*a*, the image is transmitted wirelessly to unit 252*a* and is immediately presented via display 256*a*. As in the above examples, when an image is flipped from unit 28, unit 28 is immediately blanked so as to mimic the flipping of a sheet on a conventional paper pad type flipchart. Here, when an image is flipped from master unit 28, the image and the slave unit to which the image has been flipped may be correlated and stored in either the master unit memory 88 or in the slave unit memory.

Where an image displayed via one of the slave units is to be retrieved and again displayed via master unit 28, the keyboard on unit 28 may be used to identify the slave unit from which the image is to be retrieved and then to perform the retrieval process. Once again, the retrieval process may be completely internal to unit 28 where the image presented by the slave unit is stored in master unit memory 88. In the alternative, where the slave image is stored in the slave unit memory, the retrieval process may require a retrieval request packet from master unit 28 to the slave unit (e.g., 252*a* in FIG. 12) to retrieve the image and then a second packet transmission from the slave unit back to master unit 28.

Referring now to FIG. 18, one additional system 470 consistent with at least some aspects of the present invention is illustrated. System 470 includes a single presentation unit (also referred to by numeral 470) that includes a display 474 mounted within a rigid housing assembly 472 so that a display surface 475 is observable to the audience. Here, surface 475 is generally divided into a plurality of sub-spaces for presentation purposes including adjacent spaces 476, 478 and 480. In at least some embodiments it is contemplated that there will be no mechanical delineators between presentation spaces 476, 478 and 480 and that, instead, those separate spaces will be recognizable as such only when information is presented on surface 475. Thus, for instance, referring also to FIG. 23, system 470 may include a front projector unit 471 that projects images into each of presentation surface spaces 476, 478 and 480 and a sensor assembly 473 that senses activity on display surface 475. In the alternative, unit 470 may be a flat panel plasma, LCD type display or other thin type display where separate images are presented via each of spaces 476, 478 and 480.

Referring still to FIG. 18, four touch sensitive directed arrow icons 482, 484, 486 and 488 are provided below presentation surface 478. Flip icon 484 is selectable to indicate that an image presented via surface 478 should be flipped left to surface 476 as indicated by arrow 490. Flip icon 486 is selectable to indicate that an image presented via surface 478 should be flipped right to surface 480 as indicated by arrow 492. Similarly, arrow icon 482 is selectable to indicate that the image on left surface 476 should be retrieved and presented on surface 478 as indicated by arrow 494 and arrow icon 488 is selectable to indicate that an image on right surface 480 should be retrieved and presented on central surface 478 as indicated via arrow 496. In this case, it is contemplated that the central presentation surface 478 may be useable in the same way that the master units described above are useable to edit images and to flip the images to slave units and retrieve the images from slave units.

Referring to FIG. 19, a system 520 similar to the system of FIG. 18 is illustrated that includes a single presentation unit 522 that is an electronic, flat panel unit having a presentation screen 524 that forms a viewing surface 526. As in the case of the embodiment of FIG. 18, in FIG. 19 it is assumed that some type of sensor components (not illustrated) are provided to identify locations on surface 526 that are selected or indicated via a system operator (e.g., via a stylus, the users finger, etc.). In the case of system 520, it is contemplated that a master presentation space 530 may be represented on surface 526 in a visually distinct manner such as by placing a border or outline line therearound. In FIG. 19 master space 530 is illustrated as being located generally on the central part of surface 526. In some cases more elaborate visual graphics may be provided to distinguish master space 530. For instance, consistent with the desire to mimic a flip chart, space 530 may be distinguished via graphics that resemble a flip chart.

Referring still to FIG. **19**, in some cases a control icon **536** is provided within master space **530** that can be used to flip images from master space **530** to other spaces on surface **526**.

In the illustrated embodiment after an image has been formed in master space **530**, a system operator can place the tip of a stylus in icon **536** to drag the image to another location on surface **526**. Here, it is contemplated that when the image is dragged from master space **530**, the master space and its visually distinguishing features will remain in their original positions on surface **526**. In FIG. **19**, one image previously flipped or dragged from master space **530** is labeled **528** and a second image being flipped from space **530** as indicated via arrow **540** is labeled **532**. An arrow **542** represents the tip of a stylus used by the operator to perform the dragging process.

In at least some cases when images are dragged from space **530**, control icons will move therewith so that the flipped images can be moved about surface **526** after flipping. In addition, in at least some embodiments, images previously flipped may be retrieved to master space **530** by selecting the control icon on the flipped image and dragging the selected icon back into master space **530**. Here as in the previously described embodiments, software for master space editing and display of software screen shots are contemplated.

Referring now to FIG. **20**, another inventive embodiment **550** is illustrated that includes a master unit and two slave units. The master unit includes a master display screen or assembly **554** and a master front projector unit **560** while the first and second slave units include slave screen **552** and first slave projector unit **558** and second slave screen **556** and second slave projector unit **562**, respectively. Screens **552**, **554** and **556** include display projection surfaces **564**, **566** and **568**, respectively, that are all of similar dimensions and which would each be juxtaposed for simultaneous viewing by an audience or group participating in collaborative activities. In addition, master assembly **554** includes a laser sensor unit **570** mounted along a top edge of screen **554** for sensing positions of styluses, pens, erasers, etc., on or proximate surface **566**.

In FIG. **20**, projector units **558**, **560** and **562** are positioned to project separate images on each of surfaces **564**, **566** and **568**. Master assembly **554** is linked to (not illustrated) or includes a processor akin to the processors described above for controlling images and system software generally and, more specifically, for controlling image flipping activity as well as retrieval of images back to master surface **566** for viewing and editing.

Referring to FIG. **21**, another system **600** consistent with certain inventive aspects is illustrated. System **600** includes a master presentation unit **610** and three slave units **604**, **606** and **608**. Each of the slave units **604**, **606** and **608** is similar to the slave units described above with respect to FIGS. **1**, **4** and **5** and therefore are not described again here in detail. Here it should suffice to say that each slave unit **604**, **606** and **608** is mounted to a wall **601** and more specifically via a wall mounted rail **602** and is capable of receiving images flipped thereto from master unit **610** and presenting received images via a slave presentation surface (i.e., surfaces **622**, **624** and **626**).

While each of units **604**, **606** and **608** is wall mounted, master unit **610** is a portable floor supported easel type assembly including an easel structure (also identified via numeral **610**) having an interior space **614** and one or more shelf members **616**. In the illustrated embodiment casters **618** (only two labeled) are mounted at the bottom end of easel structure **610** to facilitate movement within a facility. A computer projector and other system components may be located on shelves **616** within space **614**. Unit **610** includes a master presentation surface **612** for presenting master images, modifying the images and generally facilitating collaborative activity. As in the embodiments above, on-screen selectable icons may be provided via surface **612** for flipping master images to the slave units, to retrieve images and to perform other image management functions. Here, screen **612** may take any of several forms including a plasma screen, a rear projection screen where a rear projector is located within space **614**, a front projection screen, etc.

Referring now to FIG. **24**, one additional system **700** is illustrated that is consistent with other aspects of the present invention. System **700** includes a plurality of portable presentation units **702**, **704**, **706**, **708**, **710** and **712**. Each of units **702**, **704**, **706**, **708**, **710** and **712** is similarly constructed and operates in a similar fashion and therefore, in the interest of simplifying this explanation, only unit **702** will be described in any detail. Unit **702** includes a flat panel electronic display screen **714** that is mounted on top of a portable display stand **716**. Casters **718** are provided underneath stand **716** to facilitate movement of unit **702**. For example, unit **702** may be used in any of several different conference rooms, may be used within a private office at times and at other times within a conference space, etc. Although not illustrated, here, it is contemplated that electronic display **714** would include a tracking system for tracking activity that occurs on or adjacent the front surface of the display **714**. Thus, for example, as described above, when a pen, eraser or other electronic type device is used to modify or select information presented via display **714**, the pen or eraser activity would be sensed and cause modification to or selection of information presented via display **714**. In addition, it is contemplated that unit **702** includes a wireless transceiver (not illustrated) akin to the transceivers described above with respect to other embodiments such that unit **702** can transmit information to other units **704**, **706**, **708**, **710** and **712** and can receive information from those other units. In this embodiment, any of units **702**, **704**, **706**, **708**, **710** or **712** may be used as a master unit and any of the other units or a sub-set thereof may be used as slave units.

Referring now to FIG. **28**, one additional system **800** is illustrated as consistent with at least some aspects of the present invention. System **800** includes a relatively wide display screen or surface **802**, two video type projectors **804** and **806**, one portable flat panel display presentation unit **808**, a rack mounted processor **810**, a local area network (LAN) **812**, a wireless access point **814**, a DVD/VCR **818**, and a scanner/printer **816**. Portable presentation unit **808** is similar to the presentation units described above with respect to FIG. **24** and therefore will not be described here again in detail. Here, it should suffice to say that unit **808** includes a flat panel display screen **838** that is mounted on top of a portable cart type arrangement (not labeled) and includes a wireless transceiver **836** for transmitting information to access point **814** and receiving information therefrom.

Rack mounted processor **810** is linked via LAN **812** to access point **814** to receive information therefrom and provide information thereto for transmission to unit **808**. In addition, processor **810** is hardwired to DVD/VCR **818** and scanner/printer **816** as well as to each of projector units **804** and **806**. Projector unit **804** is configured to project information generally on the left half of surface **802** while unit **806** is arranged and configured to generally project information on the right half of surface **802**. More specifically,

unit **804** is configured to project two images in a side-by-side fashion in adjacent spaces **820** and **822** on the left half of surface **802** while unit **806** is configured to project images into third and fourth spaces **824** and **826** that are adjacent and are generally on the right half of surface **802**. When projecting either an image including information or a blank image into spaces **820** and **822**, unit **804** also projects an image identifier into the space, the image identifiers in FIG. **28** including identifiers **1** and **2** that are labeled **828** and **830**, respectively. Similarly, unit **806** projects identifiers **3** and **4** that are labeled **832** and **834** into spaces **824** and **826**. The numbers **1**, **2**, **3** and **4** are used to distinguish spaces **820**, **822**, **824** and **826** from each other during system operation. In at least some configurations processor **810** drives each of unit **808** and projectors **804** and **806** and thus controls all displayed/presented images. In these configurations unit **808** is simply an interface and the flipping/retrieving processes are performed by processor **810**. For instance, when an image is flipped from unit **808** to space **822**, unit **808** transmits a "flip" command to processor **810** which in turn causes projector **804** to display the image from screen **838** in space **822**. When the image from space **822** is retrieved, a retrieve command is transmitted to processor **810** which in turn transmits the image being retrieved back to unit **808** to be displayed.

Referring still to FIG. **28**, control icons are provided near the lower section of portable unit display screen **838**. Control icon includes space selection icons **842**, **844**, **846** and **848**, a retrieve icon **840** and send or flip icon **850**. Each of the space selection icons **842**, **844**, **846** and **848** includes a space label **1**, **2**, **3** and **4** that matches one of the labels identified by **828**, **830**, **8**, **32** and **834** associated with spaces **820**, **822**, **284** and **826**, respectively. In operation, to flip an image from screen **838** to one of spaces **820**, **822**, **824** and **826**, a user simply selects one of the space selecting icons **842**, **844**, **846** and **848** and then selects flip icon **850**. For example, to flip an image from screen **838** to space **822** on surface **802**, a user simply selects space selection icon **844** followed by flip icon **850**. Similarly, to retrieve an image from one of spaces **820**, **822**, **824** and **826**, the user simply selects a corresponding space selection icon **842**, **844**, **846** and **848** followed by retrieve icon **840**.

Referring still to FIG. **28**, when an image is flipped from screen **838**, information is transmitted from portable unit **808** via transceiver **836** to access point **814** and through LAN **812** to processor **810**. Thereafter, processor **810** controls an associated one of projection units **804** and **806** to update the image projected into a corresponding one of spaces **820**, **822**, **824** and **826**. When retrieve icon **840** is selected via screen **838**, information is transmitted to process **810** via access point **814** and LAN **812** requesting that an associated one of the images displayed by one of units **804** and **806** be retrieved and presented via screen **838**. In this embodiment, images previously displayed during a session are stored by processor **810** in an associated memory and, in at least some embodiments, only the image currently being displayed by portable unit **808** is stored in a memory of unit **808**.

Referring once again to FIG. **28**, in addition to displaying images via unit **808** and in spaces **820**, **822**, **824** and **826**, in at least some embodiments DVD's and VCR's played via unit **818** may be presented on screen **838** or one of the projected spaces. In addition, while an image is displayed via screen **838**, a print icon **870** provided just above the space control icons on screen **838** may be selected thereby causing processor **810** to print the image currently via screen **838** via scanner/printer **816**. Here, information can be scanned in via scanner **816** for display or information modification via screen **838**. When an image is scanned in, process **810** transmits the image via LAN **812** and access point **814** to unit **808** for display.

Referring now to FIGS. **13** through **16**, various methods and sub-methods consist of with certain aspects of the present invention are described. Each of the methods described herein may be used with at least one and in some cases more than one or even all of the systems described above or variations thereof.

Referring specifically to FIG. **13**, a method **270** for flipping images from a master unit **28** to a slave unit is illustrated. Referring also to FIGS. **1-5**, method **270** will be described in the context of system **10**. Beginning at block **272**, a system operator arranges the master unit and the slave presentation units or devices for viewing by an audience within room **11**. At block **274**, information is presented via master display **48**. At block **276**, processor **80** monitors input devices such as keyboard **30**, wireless control signals generated via HHD **200**, etc., for a command to flip an image currently presented via unit **28** to one of the slave presentation units **22***a* and **22***b*. At decision block **278**, where no flip command is received, control loops back up the block **274** where the method described above is repeated. At block **278**, after a flip command is received, control passes to block **280** where master unit **48** transmits the master image as part of an image data packet to the selected slave unit. At block **282**, the selected slave unit presents the received image in any of the manners described above.

Referring now to FIG. **14**, a sub-method **284** which may be used to replace blocks **280** and **282** in FIG. **13** is illustrated which correlates flipped images with image identifiers so that images can be subsequently re-accessed, re-presented and edited via master unit **28**. To this end, sub-process **284** is to be used with systems that assign unique image identifiers to images generated by the slave units where the slave units then include (e.g., print) the image identifiers with the images when images are generated. Thus, sub-method **284** will described in the context of system **230** of FIG. **11**.

Referring to FIGS. **2**, **3**, **11**, **13** and **14**, after a flip from master unit **28** to slave unit **232** has been commanded at block **278**, control passes to block **286** in FIG. **14**. At block **286**, the master image is correlated with a unique image identifier number (e.g., "6" or "7" as illustrated in FIG. **11**). At block **288**, master processor **80** stores the correlated image and image identifier number in master memory **88**. At block **290**, master unit **28** transmits the master image to the selected slave unit. At block **292**, the selected slave unit presents the transmitted image along with the image identifier number. Thus, for instance, in FIG. **11**, slave unit **232** generates the image on surface **250** and adds the image identifier number "6" in the upper left hand corner. At this point the image flip has been completed.

Continuing, at block **294**, after an image flip has been completed, master processor **80** monitors for a retrieval request for an image associated with a specific identifier number. For example, where identifier number "7" has been appended to an image on sheet **234** as indicated in FIG. **11**, the system operator may request retrieval of the image on sheet **234** via entry of number "7" and selection of the retrieve key **62** (see again FIG. **2**). At block **296**, where no retrieval is requested, control loops back up through blocks **292** and **294**. After a retrieve command is received at block **296**, control passes to block **298** where master processor **80** accesses the image correlated with the identifier number

entered by the operator and at block **300**, master unit **28** re-presents the correlated image via master display **48**.

Referring now to FIG. **15**, a method **330** for managing flipchart images where each of the slave units is identifiable by a unique slave unit identifier as is the case in the embodiment of FIG. **1** is illustrated. To this end, in FIG. **1**, slave unit **22***a* can be uniquely identified by number "1" while unit **22***b* can be identified by number "2". Referring to FIGS. **1**, **2**, **3** and **15**, at block **334**, a slave identifier (e.g., **24***a*, **24***b*, etc.) is provided on each slave display device and the slave identifier is associated in some fashion with the wireless network address corresponding to the identifier on the slave device. The associated slave identifiers and network addresses are stored in master unit memory **88**. At block **332**, the master unit **28** and the slave presentation units **22***a* and **22***b* are arranged within room **11** for viewing by an audience.

At block **336**, an image is presented and/or manipulated via master display **48**. At block **338**, master unit processor **80** monitors for a flip command indicating that the currently displayed image should be flipped to one of the slave presentation units. At block **340**, where no flip is indicated, control passes back up and through blocks **336** and **338**. Once a flip is indicated at block **340**, control passes to block **342** where the master image is correlated with the slave identifier specified by the operator (i.e., the identity of the slave unit to which the image is to be flipped).

At block **344**, master processor **80** stores the correlated image and slave identifier number in memory **88** and at block **346** master processor **80** transmits the master image to the slave unit. At block **348**, the slave unit presents the received image.

At block **350**, master processor **80** monitors for a retrieve request indicating a specific slave identifier associated with a slave unit from which an image should be retrieved. At block **352**, if a retrieval command is not received, control passes back up to block **348** and the loop described above is repeated. At block **352**, after a retrieval command is received, control passes to block **354** where processor **80** accesses the image correlated with the slave identifier in master memory **88**. At block **356**, processor **80** re-presents the correlated image via master display **48**.

Referring now to FIG. **16**, a method **360** that may be run by master unit processor **80** in parallel with any of the methods described above with respect to FIGS. **13** through **15** is illustrated. Method **360** is a method for correlating currently presented images with specific presentation units when a session store command is received, storing the correlated images and unit identifiers for subsequent access and then, when a resume command is received, for re-presenting the images via the presentation units associated therewith when the session store command was received. Thus, for instance, referring to FIG. **1**, assume that during a collaborative session first, second and third images are presented via units **22***a*, **22***b* and master unit **28** when the store key **60** is selected, respectively. Here, upon selection of key **60**, the first, second and third images are correlated with unit identifiers associated with units **22***a*, **22***b* and **28**, respectively, the correlated data is stored in master memory **88** as an image set and then the presentation surfaces of units **22***a*, **22***b* and **28** are cleared. Subsequently, when an operator resumes the session corresponding to the stored image set, processor **28** flips the first and second images to slave units **22***a* and **22***b*, respectively, for presentation and presents the third image via display **48** so that the session can continue where the session left off.

Referring to FIGS. **1**, **2**, **3** and **16**, at block **362**, images are presented via master display **48** and each of slave units **22***a* and **22***b*. At block **364**, processor **80** monitors for selection of store key **60**. At block **366**, where store key **60** has not been selected, control passes back up to block **362**. Once store key **60** is selected at block **366**, control passes to block **368** where processor **28** blanks master display **48** and transmits signals to each slave unit (e.g., **22***a*, **22***b*, etc.) causing each of the slave units to blank their respective presentation surfaces. Here, while the presentation surfaces are blanked, data corresponding to the images from the presentation surfaces is maintained in master memory **88** or a combination of master memory **88** and the slave memories (e.g., **119** in FIG. **5**).

Continuing, at block **171** processor **80** requests a session identifier from the operator that can be subsequently used to access the session images. For instance, processor **80** may provide a session identifier field and a query prompting the operator to name the session image set via master display **48**. Where a text session identifier is preferred, processor **80** may also provide touch selectable icons comprising a full alphabetical keyboard via display **48** or, in the alternative, may be capable of recognizing hand writing within the session identifier field. Instead of requesting a session identifier at block **171**, processor **80** may simply assign a random access code to the session image set and temporarily provide the code to the operator via display **48**.

At block **369**, processor **80** correlates each image in the image set with a unique presentation unit identifier (i.e., an identifier that is unique to one of master unit **28** or one of the slave units (e.g., **22***a*, **22***b*, etc.). At block **370**, master processor **80** stores the session image set with the session identifier where each of the images is associated with a specific one of the master unit and the slave unit identifiers in master memory **88**. After block **370** all of the session images have been stored in an accessible format for future reference.

Next, at block **374**, master processor **80** monitors for selection of resume icon **56** indicating that a previous collaborative session is to be resumed and therefore that a stored image set should be reaccessed and presented. At block **376**, where no resume command is received, control passes back up to block **374**. Once a resume command is received at block **376**, control passes to block **377**.

At block **377**, master processor **80** provides a request prompting a system operator to provide a session identifier corresponding to a previously stored image set. Here, the prompt may include a text query and a session identifier field along with a suitable set of touch sensitive icons (e.g., numbers, alphanumeric, etc.) for specifying an identifier.

At block **378**, the image set associated with an entered session identifier is retrieved from memory **88** and at block **380** the images in the set are displayed via the master display and the slave units so that the previous session can continue where it left off. After block **380**, control passes back up to block **362** where the process described above continues.

In addition to being able to store sets of images that are simultaneously presented via the system presentation units for subsequent access, it is also contemplated that, in at least some embodiments of the present invention, separate images may be selectable for storage and subsequent access independent of whether or not the images are flipped to slave units. For example, referring once again to FIGS. **2** and **3**, it at least some cases, master processor **80** may be programmed such that, when store key **60** is selected once, the image currently presented via display **48** is stored and, when key **60** is selected twice in rapid succession (e.g., an action

akin to a double-click of a mouse), processor **80** is programmed to store an entire compliment of session images as an image set. Where single images are stored for subsequent access, in some cases those images may be added to a session set associated with the collaborative session occurring when the image is stored. In the alternative, in some cases, when a single image is stored, processor **80** may perform a process similar to the one described above with respect to storage of session image sets, requiring a specific text or numeric image identifier from the system operator that can be used to subsequently reaccess the image.

Where images are separately stored, referring still to FIGS. **2** and **3**, when retrieve key **62** is selected, because images can be retrieved from either the master memory or from one of the slave presentation devices, processor **80** may provide a menu of options indicating the possible sources from which an image can be retrieved and suitable tools for accessing those images.

Referring to FIG. **17**, a master presentation unit **528** similar to the master unit **28** of FIG. **2** is illustrated where the master unit **528** provides a set of touch sensitive icons in a lower margin area **530**. Here, the resume icon **56**, send icon **58**, store icon **60** and retrieve icon **62** as well as the left and right flip icons **68** and **70**, respectively, have functions that mirror the functions described above with respect to the similarly numbered keys in FIG. **2** and therefore, in the interest of simplifying this explanation, will not be described again here in detail. The main difference between the icon set provided via unit **528** and the key set provided via unit **28** is that the number pad **67** in FIG. **2** has been replaced by a thumb nail sketch bar **450** in FIG. **17**. Here, it is contemplated that, whenever an image is flipped from master unit **528** to one of the slave units, a thumb nail of the flipped image will be presented via bar **450**. In FIG. **17**, two exemplary thumb nail sketches are identified by numerals **452** and **454**. Here, to re-present an image via master display **48** that is being presented by one of the slave units, instead of identifying the specific slave unit or an image identifier that has been applied to an image to access the image, the system operator can simply select one of the thumb nail sketches (e.g., **452**, **454**, etc.) and retrieve icons **62** to re-present the image via display **48**.

In at least some cases, it is contemplated that all images flipped from master unit **528** to any of the slave units are stored and maintained within the master memory **88** until a system operator terminates a collaborative session and corresponding thumb nail sketches (e.g., **452**, **454**, etc.) are added to bar **450**. Here, where the number of flipped images exceeds the number of slave presentation units which is often the case during prolonged collaborative sessions, the system operator will still be able to quickly and easily access all flipped images independent of whether or not the images are currently presented via slave units or are simply stored in the master memory. Icons **64** and **66** are left and right scrolling icons that enable the operator to graphically search a large number of thumbnail sketches for specific images to re-present. In some cases it is contemplated that all flipped images and all stored images that are not flipped will be stored in master memory **88** and represented as selectable thumbnail sketches in bar **450**.

Referring once again to FIG. **24**, in at least some inventive embodiments it is contemplated that where multiple presentation units are available and where any of the presentation units may serve as either a master or slave unit, a method may be implemented in software to quickly help a system user identify one of the units as a master unit, select a sub-set of units to operate as slave units from a larger set of units, to associate the master and selected slave units and provide tools for flipping images among the master and slave units. To this end, referring once again to FIG. **24**, in this example it will be assumed that presentation units **702**, **704**, **706**, **708**, **710** and **712** can be used for various purposes such as, for example, in private offices, in conference rooms, in public spaces such as a hallway or the entry to a cafeteria, etc. To this end, each of the units includes a flat panel display **714** mounted on top of a castered stand **716** so that the units can easily be transported from one location to another. When two or more of the units are to be used together to facilitate a conferencing process where one of the units will be used as a master unit and the other unit or units will be used as slave units, it is contemplated that several units are brought to a conference space, associated with each other and can then run applications to facilitate the conferencing process.

Referring now to FIG. **25**, a method **730** consistent with the process described above is illustrated. Referring also to FIG. **24**, at block **732**, several display units (e.g., **702**, **704**, **706**, **708**, **710** and **712**) are provided where each of the display units has a unique wireless address. For example, display unit **702** may have a wireless address 00425A1, unit **704** may have a wireless address 54478B1, unit **706** may have a wireless address 89908B1, etc. At process block **734**, several of the display units are brought into a conferencing space (see FIG. **24**).

At process block **736**, with each of the units in the conferencing space turned on, a system operator indicates that one of the units is to be employed as a master unit. To this end, as illustrated in FIG. **24**, in at least some embodiments whenever one of the units (e.g., **702**) is turned on, information (i.e., an initial interface) is presented via the unit's display (e.g., **714**) that instructs the system operator on how to select the unit as a master unit. In this regard, instructions **720** may be provided via display **714** along with a selectable MASTER icon **722** for identifying unit **702** as the master unit. Similar instructions and master icon (e.g., see **724**) are provided via each of units **704**, **706**, **708**, **710** and **712**. When an operator indicates that one of the units is to be a master unit, by default, the other units in the conference space are identified as possible slave units. In the present example it will be assumed that an operator selects MASTER icon **722** via display **714** thereby indicating that unit **702** is to be the master unit.

Continuing, at block **736**, after an operator selects unit **702** as the master unit, unit **702** wirelessly polls the conference space to identify other presentation units **704**, **706**, **708**, **710** and **712** within the space. When each of units **704**, **706**, **708**, **710** and **712** receives the polling signals requesting that the units identify themselves as possible slave units, each unit **704**, **706**, **708**, **710** and **712** transmits an information packet back to master unit **702** identifying the slave unit by its unique wireless network address. For example, consistent with the exemplary addresses above, unit **704** transmits an information packet including unique address 54478B1, unit **706** transmits an information packet including unique address 89908B1, etc. When unit **702** receives the return information packets from the possible slave units, unit **702** identifies each of the possible slave units, associates a unique simple identifier with each of the slave units and then further facilitates the configuration process. To this end, in the present example, master unit **702** identifies five separate slave units **704**, **706**, **708**, **710** and **712** and associates simple identifiers **1**, **2**, **3**, **4** and **5** therewith, respectively.

Referring still to FIG. **25** and also to FIG. **26** at block **738**, after identifying the five slave units, master unit **702** transmits information packets back to each of the five slave units

704, 706, 708, 710 and 712 assigning the simple identifier labels to each. In the present example, the identifier labels include numbers 1, 2, 3, 4 and 5 which are transmitted to units 704, 706, 708, 710 and 712, respectively. When a slave unit receives a simple identifier label, the unit displays the label via its display screen. In FIG. 26, the displayed simple labels are shown at 752, 754, 756, 758 and 760.

In addition, referring still to FIGS. 25 and 26, at block 738 master unit 702 provides a configuration interface including a master label 750 designation near the top thereof, instructions 780 for selecting a sub-set of the slave units within the conference space to be used in conjunction with master unit 702 to facilitate the conferencing process and icons corresponding to the simple labels (e.g., 752, 754, etc.) associated with each of the slave units 704, 706, 708, etc. For example, icon 762 is associated with label 752 and hence with slave unit 704. Similarly, icons 766, 768, 770 and 772 are associated with labels 754, 756, 758 and 760 and hence with slave units 706, 708, 710 and 712, respectively. An enter icon 774 is also provided near the bottom of the master unit display. Here, consistent with instructions 780, a sub-set of the slave units 704-712 can be selected by selecting a sub-set of the icons 762, 766, 768, 770 and 772 and then selecting ENTER icon 774. For example, to select slave units 706, 708 and 710 as units to be used in conjunction with master unit 702 during the conferencing session, an operator select icons 766, 768 and 770 and then selects ENTER icon 774. This process of monitoring for slave unit sub-set specifying activity is represented by blocks 740 and 742 in FIG. 25.

Once ENTER icon 774 is selected, at process block 744, master unit 702 provides a control interface including the master label 750 designation and provides icons suitable for flipping master images to the sub-set of selected slave units and for retrieving images from the selected sub-set of slave units. To this end, referring to FIG. 27, master unit 702 provides a separate flipping/retrieving icon 782, 784 and 786 for each of the selected sub-set of slave units 706, 708 and 710, respectively. The flipping/retrieving icons 782, 784 and 786 are similar and operate in a similar fashion and therefore, of interest of simplifying this explanation, only icon 784 will be described here in any detail. Icon 784 includes a flip arrow icon 769 and a retrieve arrow icon 771. When flip icon 769 is selected, an image currently displayed via the master display is flipped or transmitted to the slave unit 708 associated with icon 784 (i.e., unit 708 that is associated with simple label 754). Similarly, when retrieve arrow icon 771 is selected, the image currently displayed via slave unit 708 is retrieved and displayed via the master display unit 702. An END icon 788 is provided for ending the current conferencing process.

Thus, it should be appreciated that multiple use electronic displays can be configured in many different ways for separate and combined uses. It should also be appreciated that where displays are equipped for wireless communication, software can be provided that allows the displays to streamline a configuring process.

Referring now to FIG. 29, yet one more system 890 that is consistent with at least some aspects of certain embodiments of the present invention is illustrated. Referring also to FIG. 28, the system 890 includes first and second sub systems 900 and 901 that are each akin to system 800 described above with respect to FIG. 28. Thus, each of systems 900 and 901 includes a portable master presentation unit, first and second projector units, a display screen, a rack mounted processor, a local area network and a wireless access point, none of which are separately labeled in FIG. 29. As in the embodiment illustrated in FIG. 28, each of the projectors is configured to project two separate images onto the display screen. For example, in FIG. 29, one of the projectors in subsystem 900 projects first and second separate images into first and second separate spaces 904 and 906 while one of the projectors in subsystem 901 projects first and second images into first and second spaces 903 and 905, respectively. In FIG. 29, in addition to the components described above, the local area networks are linked via a wide-area network (WAN) 920.

Referring still to FIG. 29, in at least some configurations, it is contemplated that system 901 would be remotely located from system 900 and that either of the portable presentation units could be used as a master presentation unit. It is also contemplated that, in at least some applications, when a system user uses one of the master presentation units to perform a presentation, all activity that occurs in the corresponding subsystem would be replicated in the other subsystem. For example, when a system user makes changes to information on master display screen 902, those changes would be, essentially in real time, replicated on remote master presentation screen 907. In addition, when a system user flips an image from master presentation space 902 to one of the slave presentation spaces (e.g., 904, 906, etc.), the flipping activity would also be replicated within system 901. For example, if a system user flips an image from space 902 to space 904 in system 900, the same image would be flipped from space 907 to space 903 in subsystem 901. Similarly, if a system user retrieves an image from space 906 back to master presentation space 902, the image from space 905 would also be retrieved back to master space 907 in subsystem 901.

In addition, activity that alters an image in master presentation space 907, in at least some embodiments, would also automatically and essentially in real time alter a similar image in master presentation space 902. Similarly, flipping and retrieving of images via space 907, in at least some embodiments, would be reflected by similar activity occurring in subsystem 900.

Referring now to FIG. 30, another embodiment 950 that is consistent with at least some aspects of some embodiments of the present invention is illustrated. Referring also to FIG. 28, system 950 is similar to system 800 in that system 950 includes a portable master presentation unit 951, a display screen 953 and first and second projectors 964 and 966. Other components illustrated in FIG. 28 are not shown in FIG. 30 in the interest of simplifying this explanation. The primary difference between the system in FIG. 30 and the system illustrated in FIG. 28 is that unit 951 includes a flat panel display 955 that can be rotated from the portrait view as illustrated in FIG. 30 to the landscape view illustrated in FIG. 31 as indicated by arrow 957. Here, it is contemplated that when display 955 is rotated from the portrait orientation to the landscape orientation, at least two changes may, in at least some embodiments, automatically occur. First, the number of slave images projected may be dependent upon unit 955 orientation. To this end, in at least some embodiments it is contemplated that when display 955 is in the portrait orientation as illustrated in FIG. 30, each projector 964 and 966 may be programmed to project two separate adjacent images. For instance, as illustrated in FIG. 30, projector 964 projects first and second images into adjacent spaces 956 and 958 while projector 966 projects first and second images into adjacent spaces 960 and 962 where each of the projected images has a portrait form. Referring to FIG. 31, when unit 955 is rotated into the landscape orientation, the processor that drives the projectors is programmed to automatically reformat so that each of projectors 964 and

966 only projects one landscape image. In FIG. 31, projector 964 projects a first landscape image into landscape space 980 while projector 966 projects a second image into landscape space 982.

Second, when display 955 is rotated from the portrait orientation to the landscape orientation, the control icons 954 presented via display 955 are altered to, first, correspond to the changes made to the slave presentation spaces and so that the control icons 954 are better oriented within the viewing portion of display 955. To this end, as illustrated, while four slave space selection icons are illustrated if FIG. 30, only two slave space selection icons are illustrated in FIG. 31, a separate one of the slave space selection icons corresponding to each one of the slave spaces 980 and 982. From the foregoing, it will be observed that numerous modifications and variations can be effected without departing from the true spirit and scope of the novel concept of the present invention. It will be appreciated that the present disclosure is intended as an exemplification of the invention, and is not intended to limit the invention to the specific embodiment illustrated. The disclosure is intended to cover by the appended claims all such modifications as fall within the scope of the claims. For example, master unit 28 may simply be a conventional whiteboard equipped with a camera wherein, when an image is flipped from the master unit to one of the slave units, the camera takes a picture of the image presented via the master unit and transmits that image to a selected slave unit for presentation.

In addition, while all of the presentation units described herein include mounting members that mount the presentation units to a wall mounted rail, it should be appreciated that other types of support structures for the presentation units are contemplated. For instance, master unit 28 may be supported by an easel type assembly or may be a cart mounted assembly where the cart includes casters to facilitate easy movement of the unit within a facility.

Moreover, while a simple eraser and printer are described above, it should be appreciated that various types of printers and erasers are contemplated and may be used with the various embodiments of the present invention. For instances, in some cases, slave presentation surfaces may be provided by rigid whiteboard member and the printers described above may be plotters that move along the presentation surface or relative thereto (i.e., the rigid whiteboards may in fact be moved with respect to the plotters) and the eraser may be supported and moved in a similar fashion to provide images on the presentation surface and to erase images therefrom.

Furthermore, both the slave and master presentation units may be supported in any fashion including permanent wall mounts, easel type support structures (see FIGS. 24, 26 and 27) with or without casters to facilitate movement, ceiling mounts, structure that secures the units to partition walls, etc.

While systems described herein include only two slave units, it should be appreciated that some systems will include three or more slave units. In addition, some systems may include more than one type of slave unit. For instance, referring again to FIGS. 11 and 12, a printer type slave unit like unit 232 may be added to the system 251 of FIG. 12 so that the system includes the printer 232 as well as flat panel units 252*a* and 252*b*. Other slave unit combinations are contemplated.

In at least some cases all of the system units (e.g., the master and slave units) may have identical constructions and functionality so that images can be edited via any of the units and can be flipped from or retrieved to any of the units. Thus, for instance, where three units like master unit 28 comprise a system, an operator may move among the units editing and flipping and retrieving in an enhanced collaborative fashion.

In addition, while one simple rail 40 configuration is described above, the invention contemplates many different types of rail configurations including other hook to hook type rails, rails that may receive wheels mounted on the master and slave units, rails that are only mountable via the ends thereof (e.g., the rail may restrict removal of mounted units via upward or forward motion—this is particularly important in cases where the units are relatively expensive) and other system where the units include securing structure to more effectively secure the units to the rail members 40.

As illustrated in FIG. 28, in addition to the components above, any of the inventive systems may also include a standard sized printer/scanner (e.g., 8½"×11", legal size, etc.) for printing copies of displayed images for meeting attendants to use during a meeting or to take from the meeting or so that documents can be quickly scanned in for viewing and editing via the system.

Moreover, referring to FIGS. 1 and 22, in at least some cases, it is contemplated that one or all of the master and slave units 28, 221, 22*b*, may be located remotely 798 from a presenter using a laptop or personal computer to control master and slave units and the images presented thereon. Here, for instance, if a presenter in Chicago makes a mark on a Chicago based unit 800 display, the mark may be immediately provided on a master unit 28 (see again FIG. 1) located in a New York conference room. Here, if the user indicates that the master image should be flipped to the first slave unit 22*a*, the image in New York is flipped to the first slave unit 22*a* in New York. Similarly, images from the New York located slave units may be retrieved to the master unit 28 for editing via commands entered in Chicago. In the case described above, referring to FIG. 22, the remote control unit 200 (see again FIG. 10*a*) communicates via a network link 810 (e.g., the Internet) with the master unit 28 to drive the New York based presentation.

In some cases unit 800 may include representations of each of the master and slave unit images to help the presenter keep track of the remote presentation. To this end display 812 in FIG. 22 includes a master unit image box 814 and first and second slave unit image thumbnail sketches 816 and 818. In this case flipping and retrieving may be as simple as dragging images from one box or sketch or the other. For instance, to flip to the first slave unit 22*a*, a presenter may simply drag the master image in box 814 to thumbnail 816. Similarly, to retrieve the second slave unit image, the user may simply drag the second slave unit thumbnail 818 to the master box 814. This feature may also be used in the context of a unit 800 to control master and slave images locally (i.e., with unit 800 in the same space as the presentation units).

In some cases the master unit 28 and sub-set of the slave units 22*a*, 22*b* may be located in Chicago while one or more slave units are remotely located in New York. Here the presenter could control the flipping process to the different slave units in a manner similar to that described above.

In addition, referring again to FIG. 24, in at least some cases a handheld interface device 731 may be provided for designating master and slave units. To this end, device 731 may be programmed to wirelessly poll units 702, 704, 706, 708, 710 and 712 to identify possible master and slave units and provide selectable icons via a display 733. Here, once a master unit and sub-set of slave units are selected, device 731 may transmit the designation information to the corresponding units 702, 704, etc., causing appropriate configu-

ration to facilitate flipping/retrieving of images from and to the master unit. After configuration, control interface tools may be provided via either the master unit or device **731** or via both.

Moreover, while the system of FIG. **24** is described in the context of wireless communication, in at least some cases the communication may be via hardwire hookup.

Furthermore, the configuration aiding process described above with respect to FIGS. **24-27** could be employed with other types of presentation units such as roll down or projection type units, etc., and may not require all of the steps of FIG. **25**. For instance, a master unit may be predefined or one unit type may always be the master unit when used with other unit types. For instance, where one unit is an electronic flat panel touch screen and the other units are roll down type units, the touch screen unit may always be the master unit and may poll other units in a conferencing space during commissioning.

Next, an exemplary interface that includes several inventive features will be described in the context of the system **890** illustrated in FIG. **29** wherein an information presenter uses master unit **902** to present information to conference attendees within a conference room including the components which make up subsystem **900** and to another group of attendees in a remote conference room that includes subsystem **901** components. At least some of the conference attendees may have and may be using personal interface devices including, for instance, laptop computers **911**, **913**, **915**, etc., to participate in the conference. In FIG. **29**, laptops **911** and **913** are linked via a LAN to subsystem **900** while laptop **915** is linked to subsystem **900** via WAN **920**. In the illustrated embodiment laptops **911** and **913** are used within the conferencing space that includes subsystem **900** such that the laptop users can view their laptop displays, the image presented via master unit **902** or the slave images (e.g., **904**, **906**, etc.) presented via a slave presentation space **969**. Similarly, one or more of the laptops may be used within the conference space associated with sub-subsystem **901**. In addition, in the illustrated embodiment, laptop **915** is used remotely to patch in and monitor/participate in conference activities. Hereinafter, unless indicated otherwise, laptops **911**, **913**, **915**, etc., will be referred to as personal interface devices.

Referring still to FIG. **29** and also to FIGS. **32** and **33**, in the present example it will be assumed that at a certain point during a presentation, master unit **902** provides an interface to the presenter that has characteristics that are consistent with screen shot **1000** and that the presenter has caused instances of four images **1022**, **1024**, **1026** and **1028** to be displayed on slave presentation surface **969**. Thus, conference attendees within the conference room that includes subsystem **900** can observe an image presented via master unit **902** as well as each of the four images illustrated in FIG. **33**.

Referring again to FIGS. **29**, **32** and **33**, in at least some embodiments where two sub-systems **900**, **901** that have similar presentation capabilities are linked, all of the images that are presented via one of the sub-systems (e.g., subsystem **900**) are repeated or re-presented by the components of the other subsystem (e.g., subsystem **901**). Thus, for instance, where the images in FIGS. **32** and **33** are presented via master unit **902** and space **969**, five identical images are simultaneously presented via unit **907** and slave presentation space **971**. Similarly, in at least some embodiments, any activity that is performed by the components of sub-system **900** may be repeated via the components of sub-system **901** essentially in real time so that attendees in the separate conference spaces associated with subsystems **900** and **901** can simultaneously view image activities. Thus, for instance, if the image displayed via the sub-space of space **969** that is labeled "2" is altered, the image displayed via the sub-space of space **971** that is labeled "2" would likewise be altered so that whatever images are presented via sub-system **900** would likewise be presented via sub-system **901**. As another instance, if an image presented via master unit **902** is altered, the similar image presented via unit **907** is also altered in the same fashion.

Referring still to FIG. **32**, interface screen shot **1000** is shown in a format suitable for display via a 16 by 9 aspect ratio display screen where the display screen is in a portrait orientation (i.e., the long dimension 16 is vertical and the short dimension 9 is horizontal). As illustrated, when a 16 by 9 screen is in the portrait orientation, in at least some embodiments exemplary screen shot **1000** includes a tool area **1002** along a top edge of the screen shot **1000** and a workspace area **1004** there below. With respect to the general 16:9 portrait layout shown in FIG. **32**, it has been recognized that it is advantageous to provide a workspace area **1004** that has dimensions that are similar to the dimensions of a typical mechanical flip chart pad or a typical personal computer screen in order to maintain a form factor that many conference attendees have become accustomed to. A typical flip chart pad has an aspect ratio of approximately two units wide by three units high while a personal computer display screen typically has an aspect ratio of approximately four units wide by three units high. Here, in at least some embodiments, when the master unit is in a portrait landscape as illustrated in FIG. **32**, area **1004** has a 2:3 aspect ratio (e.g., 2 wide by 3 high) and the remaining space is used to accommodate tool area **1004**. As described in greater detail below, when the master unit is in a landscape orientation (FIG. **40**), a workspace area **1216** has a 4:3 aspect ratio (i.e., 4 wide by 3 high) and the remaining space is used to accommodate tool area **1202**.

Referring again to FIG. **32**, with a 16:9 aspect ratio screen, by providing the tool area along a top edge or, in at least some embodiments, along a bottom edge (not illustrated) of the screen, a maximum size 2:3 aspect ratio (i.e., 2 wide by 3 high) can be formatted. Here, to provide a 2:3 format workspace area **1004**, an 18:5 format tool area **1002** can be configured.

The 18:5 tool area format was selected primarily because that ratio is generally consistent with the largest 2:3 workspace area **1004** that can be obtained with a 16:9 display screen. Here, it should be appreciated that other screen layouts are contemplated that would be consistent with the general teaching that the workspace area **1004** should be dimensioned within the 2:3 to 3:4 range. To this end, referring to FIG. **32**, in another embodiment, instead of locating tool area **1002** along the top edge of the screen, tool area **1002** could be located along the bottom edge. Similarly, tool area **1002** could be divided into first and second separate tool areas located along the top and bottom edges of the screen where each of the tool areas has a 36:5 aspect ratio or some other ratios that, when combined, result in an 18:5 ratio. In still other embodiments the workspace area **1004** may be made smaller than the maximum size possible for a 16:9 screen but still having the desired 2:3 to 3:4 aspect ratio. Other exemplary screen shots corresponding to 4:3 aspect ratio display screens in portrait and landscape orientation and to a 16:9 aspect ratio display screen in landscape orientation are described hereafter with reference to FIGS. **40**, **42** and **43**.

Referring still to FIG. **32**, as the label implies, tool area **1002** includes a plurality of on-screen icons that are selectable by the presenter for changing the information displayed via unit **902** and on slave presentation space **969**. The on-screen icons may be selectable in any of several different ways such as, for example, via touch, stylus, movement and activation of a mouse controlled pointing icon, a track ball, etc. For the purposes of this explanation it will be assumed that unit **902** includes sensors for identifying when a location on the display screen is touched and the position of the touching activity, unless indicated otherwise.

Referring now to FIGS. **29** and **34**, FIG. **34** illustrates an exemplary screen shot **1030** that may be presented to a user of one of the personal interface devices **911**, **913**, **915**, etc., according to at least some inventive embodiments. Referring also to FIGS. **32** and **33**, as illustrated in FIG. **34**, the information presented to the remote user includes all of the information that is presented to conference attendees within the conference space that includes subsystem **900**. Thus, as illustrated in FIG. **34**, exemplary screen shot **1030** includes five windows, a separate window corresponding to each of the images currently displayed via master unit **902** and the slave images **1022**, **1024**, **1026** and **1028** presented in space **969**. In FIG. **34**, window **1032** corresponds to the image displayed via master unit **902** while windows **1034**, **1036**, **1038** and **1040** correspond to slave images **1022**, **1024**, **1026** and **1028**, respectively, as illustrated in FIG. **33**.

Referring once again to FIGS. **32** and **34** and, more specifically, to window **1032** in FIG. **34**, like screen shot **1000** that includes tool area **1002** and workspace area **1004**, window **1032** that corresponds to master unit **902** includes a tool area **1031** as well as a workspace area **1033** that are arranged in the same fashion as sections **1002** and **1004**. As illustrated, tool area **1031** includes a full complement of screen selectable icons corresponding to the tool icons illustrated in FIG. **32**.

In at least some inventive embodiments, in addition to a presenter using master unit **902** being able to modify image information, any conference attendee is able to modify image information via workspace section **1033** and, when an image is modified via section **1033**, the modifications are used, essentially in real time, to modify the image presented via master unit **902** and hence to modify all images that repeat the master unit image. Thus, in at least some embodiments, all or at least a sub-set of attendees are able to perform the same image manipulating functions as the presenter that uses master unit **902**. Similarly, in at least some embodiments, any attendee using a personal interface device **911**, **913**, **915**, etc., is able to alter which images are displayed within the on screen windows **1032**, **1034**, **1036**, **1038** and **1040** using the tools in tool area **1031** in a fashion similar to that used by a presenter using master unit **902**. Thus, for instance, an attendee using personal interface device **911** can, in the present example, move a new image into window **1036** using a tool from area **1031** which in turn causes the same new image to be displayed as one of the slave images on presentation space **969** (see again FIG. **29**).

Referring now to FIG. **35**, exemplary tool area **1002** is illustrated and includes a first tool section **1052**, a target section **1054**, a panel section **1056**, a source section **1058** and a second tool section **1060**. As the labels imply, tool sections **1052** and **1060** include on screen selectable icons that correspond to different types of tools that can be used to modify images that are displayed within a corresponding workspace section (see again **1004** in FIG. **32**) as well as other types of icons to be described hereinafter. First tool section **1052** includes an eraser icon **1062**, a pointer icon **1064**, a pen icon **1070**, a drop down arrow icon **1068** and a "current settings" indicator **1066**. Pen icon **1070** is selectable to indicate to master unit **902** that a mechanical or electronic stylus device to be used with unit **902** is to be used as a pen to add information to a displayed image. Once pen icon **1070** has been selected, the mechanical or electronic stylus is useable to apply markings to the image in workspace area **1004**.

Eraser icon **1062** is selectable to indicate to master unit **902** that the mechanical stylus is to be treated as an eraser for removing or erasing information from the master unit display screen. Once icon **1062** is selected, the mechanical stylus tip can be moved about the screen surface within area **1004** to remove information previously applied via the pen tool. In at lease some embodiments a button (not illustrated) on the stylus may be selected to indicate a desire to use the stylus as an eraser. When the stylus eraser button is selected and the master unit sensors sense stylus activity, the activity is assumed to be erasing activity.

Pointer icon **1064** is selectable to indicate to master unit **902** that the stylus should be used as a pointing device instead of as an eraser or as a pen for, for example, selecting information within workspace area **1004**, selecting on screen icons within workspace area **1004** when software applications that use on screen icons as input are running, moving selected and/or non-selected information on the display screen, rotating screen information, re-sizing screen information, etc.

When one of the icons **1062**, **1064** or **1070** is selected, the selected icon is, in at least some embodiments, highlighted in some fashion to indicate selection. For instance, when pen icon **1070** is not selected, a pen cap is presented as covering the pen tip as illustrated in FIG. **32**. When pen icon **1070** is selected, the cap is eliminated to expose the tip as illustrated in FIG. **35**. Similarly, eraser icon **1062** and pointer icon **1064** will be visually distinguished in some fashion when selected.

Icon **1068** is selectable to open one or more drop down menus associated with a currently selected one of icons **1062**, **1064** or **1070**. Thus, for example, when pen icon **1070** is selected and then icon **1068** is selected, a drop down menu opens up enabling a presenter to select pen type, thickness, line effect (e.g., dashed, full, etc.). An another example, when eraser icon **1062** is selected and then icon **1068** is selected, a drop down menu opens up enabling a presenter to select eraser characteristics such as eraser swath width, what information an eraser will erase (e.g., erasing may be limited to a specific color marking), etc.

Current settings icon **1066** is an on-screen indicator that, as the label implies, indicates current characteristics associated with a currently selected tool such as pen color, line thickness, line effect, etc., or eraser swath width, etc.

Referring still to FIG. **35**, source section **1058** includes a plurality of icons, each of which corresponds to a different source for information that can be presented via master unit workspace area **1004**. In FIG. **35**, the source icons include twelve separate icons arranged in three rows of four icons each. The illustrated icons include three different types including computer icons (e.g., **1102**), **1103**, etc., video icons, one of which is labeled **1100** in FIG. **35**, and an easel icon **1098** corresponding to another apparatus akin to master unit **902**. A separate computer icon like icon **1102** is provided that corresponds to each of the personal interface devices **911**, **913**, **915**, etc. that is used to patch into the conference. Thus, for example, consistent with FIG. **29**, a separate computer source icon **1102** is provided for each of devices **911**, **913**, **915**, etc. Here, it is assumed that when a

person patches into a conference and becomes an attendee, identifying information will be obtained in some fashion (e.g., received from the attendee or automatically obtained via a system processor). In the present example it is assumed that a system processor derives a unique identifier such as an attendee's initials from the identifying information. In the present example attendee initials are provided with each of the separate computer icons so that the attendee associated with each specific icon can easily be identified. For instance, in FIG. **35**, the initials ASD, are associated with computer icon **1102** while initials SSC are associated with icon **1103** to indicate identity of the attendees using the interface devices associated with icons **1102** and **1103**, respectively.

Here, it is contemplated, in at least some embodiments, that when one of the computer icons (e.g., **1102**) is selected, the information currently displayed via the laptop associated with the selected icon is simultaneously displayed via the master unit **902**. More specifically, when one of the computer icons is selected, a window is opened on the master unit screen that corresponds to the associated laptop and the information currently displayed via the associated laptop is simultaneously displayed via the master unit. For example, referring again to FIGS. **29**, **35** and **36**, assume that personal interface devices **911** and **913** are used by conference attendees having the initials "ASD" and "SSC" and that the two attendees would like to share sales information with other attendees for comparison purposes. Here, each attendee ASD and SSC can use interface device software to access the sales information to be presented and compared in a dedicated window, can use the tool area **1031** provided via the attendee's interface device (see also FIG. **34**) to select the icon (i.e., icon **1102** or **1103**) from space **1058** corresponding to the specific user and can then maximize the information (i.e., increase the size to cover an entire interface device screen) to present the sales information via the master unit screen.

In FIG. **36**, activity like that described above, causes exemplary windows **1178** and **1181** to be opened to display sales information for attendees ASD and SSC as images **1179** and **1183**, respectively. Referring to FIG. **36**, when computer icon **1102** is selected (i.e., double clicked dragged into workspace area **1032**, etc.), window **1178** is opened and an image **1179** is displayed therein corresponding to an image currently displayed by the interface device associated with icon **1102**. In FIG. **36** it is assumed that user ASD has maximized the window including the displayed bi-quarterly results on her laptop computer so that window **1178** only shows the bi-quarterly results. Similarly, when icon **1103** is selected, window **1181** is opened and an image **1183** is displayed therein corresponding to an image currently displayed by the interface device associated with icon **1103**. Thus, multiple windows corresponding to multiple sources are openable via the master unit **902** within workspace area **1004**.

Referring again to FIGS. **29** and **36**, because information including windows **1178** and **1181** that is displayed in workspace area **1004** can be "moved" and displayed via the slave projector units (i.e., the units that project onto space **969**), it is possible to show "live views" (i.e., the information currently displayed via the personal computing devices **911**, **913**, **915**, etc.) of multiple personal computing devices on multiple slave images projected onto space **969**. For instance, in FIG. **36**, the master unit user may increase the sizes of windows **1178** and **1181** (i.e., drag corners of the windows) and move the windows (e.g., the top window bar may be dragged to another location to move the window) so that the windows **1178** and **1181** cover the top and bottom halves of area **1004** and then move the image including windows **1178** and **1181** to slave space **904**. Next, the master unit user may select two additional computer icons from section **1158** (see again FIG. **35**) to display sales results currently displayed via two other personal computing devices (e.g., **911**, **913**, **915**, etc.) thereby opening two other windows in area **1004**. After resizing the newly opened windows to each cover half of area **1004**, the user may then move the image including the new windows to slave space **906** in FIG. **29**. This process can be repeated several times to display multiple live windows in space **969**.

In at least some embodiments an icon in section **1058** is selectable by touching the icon with the tip of the mechanical stylus and dragging the icon into area **1004**. In other cases an icon in section **1058** can be selected by tapping the stylus tip on the icon once or twice. To close an open window (e.g., **1178**), each window includes a screen selectable close icon **1185** (only one illustrated). Although not illustrated, window **1178**, **1181**, etc., size may be altered in at least some embodiments so that, for instance, windows **1178** and **1181** in FIG. **36** may be resized to fill the upper and lower halves of workspace area **1004**.

When a window (e.g., **1178**, **1181**) is opened in area **1004**, pen icon **1070** is useable to mark anywhere within area **1004** including on the window images and between windows and other space within area **1004**. For example. In FIG. **36**, markings **1187** have been added to the information displayed within section **1004** to highlight differences between information in each of windows **1178** and **1181** where the markings **1187** are on windows **1178** and **1181** as well as in the space between the windows.

In at least some embodiments, when an image displayed in workspace area **1004** includes windows **1178**, **1181**, etc. and is minimized (i.e., is removed from workspace area **1004** but still appears as a panel icon in section **1056**) so that another image can be displayed or created within section **1004**, the open windows remain associated with the minimized image such that, if the minimized image is again maximized (i.e., displayed in section **1004**), the windows are again presented. Similarly, when an image including windows is stored, the window information is stored along with the image such that when the image is reaccessed, the windows are re-presented. In short, in these embodiments all information presented via area **1004** is maintained upon minimization and/or storage for subsequent access.

Referring again to FIG. **36**, stop and resume icons **1197** and **1199** are provided adjacent close icons (e.g., **1158**) at the top of each window **1178**, **1181**, etc., associated with one of the personal computing devices. Stop icons **1197** are selectable to freeze the information displayed in corresponding windows. For instance, when icon **1197** is selected, the currently displayed information in window **1178** is maintained irrespective of which information is displayed via the personal computing device associated with window **1178**. To update window **1178** to reflect information currently displayed via the personal computing device associated with window **1178** after icon **1197** has been selected, resume icon **1199** is selectable.

With respect to video icon **1100**, it is contemplated that, in at least some inventive embodiments, there may be video sources such as DVD players, cameras, tape players, hard drives, etc., that can provide streaming video clips useable by a presenter or an attendee during a conference. Icon **1100** corresponds to one video source and, when selected, provides a corresponding video clip in a window. In FIG. **36**, a video window **1180** corresponding to source video icon **1100** is shown open and includes a video clip image **1190**, source

identifier information **1182** and a control bar that includes a pause icon **1184**, a play icon **1186** and a close icon **1188**. The identifier information **1182** provides initials identifying an attendee that controls the video device that is the source of the video. When window **1180** is opened, in at least some embodiments, clip **1190** automatically begins to play. Clip **1190** can be paused by selecting icon **1184** and can be resumed by selecting icon **1186**. Window **1180** is closable by selecting icon **1188**. In at least some embodiments window controls **1184**, **1186**, **1188**, etc., may be linked to a conference room control system to physically control window activity (e.g., play, pause, etc.).

Here, as in the case of windows **1178** and **1181**, in at least some embodiments window **1180** can be moved and/or scaled within area **1004**. In addition, multiple video type windows like window **1180** can be opened at one time and multiple video clips can be played at one time. Moreover, pen tool **1070** can be used to make markings on a video clip and/or on a still video clip image. In at least some embodiments, when an image including a video type window is minimized and/or stored, the window is included with the image and is re-presented when the image is again accessed via area **1004**.

Easel icon **1098** is associated with an interface unit akin to master unit **902**. Referring again to FIG. **29**, device **907** is a second large scale interface device like master unit **902** and may be used in several different ways. First, unit **907** may be used to, in effect, shadow unit **902** and always display exactly what is displayed via unit **902** as described above. Second, unit **907** may be used separately like one of personal interface devices **911**, **913**, **915**, etc., to run applications and/or create images. In this second case, unit **907** can be used as a source like interface devices **911**, **913**, **915**, etc., and the image displayed thereby can be duplicated via unit **902** when master unit icon **1098** is selected. Although not illustrated there may be more than just two units **902** and **907**.

To add a new source, a "+" icon **1104** that is spatially associated with section icon **1158** is selectable. When icon **1104** is selected, in at least some embodiments, a window (not illustrated) will open that is useable to identify the new source to be added. In some embodiments the user of a new source may attempt to join a conference via a personal interface device or the like and may either automatically be admitted, may be accepted by a current attendee in some fashion or via password entry, etc. In either case, when a new source is added, a new source icon is likewise added to section **1058**. When a source is rendered in accessible to a conference such as when an attendee using an interface device **915** disconnects from the conference, the associated source icon is removed from section **1058**.

Referring again to FIG. **35**, panel section **1056** includes a separate panel icon corresponding to each image or newly opened image that has not been deleted or closed during a presentation. In FIG. **35**, twelve separate panel icons are illustrated where each panel icon has been assigned and is labeled with one of numbers 1-12. Each panel icon includes a thumbnail sketch of the image associated therewith. In the present example, while images are associated with each of panel icons **1**, **2**, **3** and **5**, no information has been associated with panel icons **4** and **6-12** (i.e., blank pages have been created that correspond to icons **4** and **6-12** and no images have been included on those pages). To create a new blank page, a "+" icon **1094** spatially associated with section **1056** is selectable. Panel icons can be eliminated by selecting a panel icon and moving the panel icon to a trash icon **1074** which is described in greater detail below.

Referring yet again to FIGS. **29** and **35**, the panel icon corresponding to an image currently displayed via the master unit **902** is visually distinguished from other panel icons in section **1056**. For example, referring again to FIGS. **32** and **35**, when the image corresponding to panel icon **3** is displayed in workspace area **1004**, the third panel icon is highlighted via a visually distinguishable box **1079** about the panel icon. In addition, as seen in FIG. **32**, the icon number associated with the panel icon that corresponds to the image being displayed via the master unit is presented as part of the displayed image. For instance, in FIG. **32**, the number **3** is illustrated in the upper right hand corner of the image displayed in area **1004**.

Referring still to FIG. **35**, in at least some embodiments, in addition to visually distinguishing a panel icon that corresponds to an image currently being displayed via the master presentation unit **902**, the interface software visually distinguishes panel icons currently presented via the slave units. To this end, in FIG. **35**, slave markers **1082**, **1084**, **1086** and **1088** are provided on top of each panel icon that corresponds to a currently displayed slave image. Consistent with FIG. **33**, the slave markers are provided on top of each of the panel icons associated with panels labeled **1**, **2**, **3** and **5**. Although not illustrated, in at least some embodiments, slave markers **1082**, **1084**, **1086** and **1088** will appear at least somewhat translucent so that a presenter and attendees can see information there below and generally recognize which panel corresponds to which icon despite inclusion of the slave markers.

Referring once again to FIG. **29**, in at least some embodiments it is contemplated that when two or more subsystems **900**, **901**, etc., are linked together for conferencing, the subsystems **900**, **901**, etc., may include different numbers of slave images at certain times (e.g., one sub-system may include more slave hardware than another or others). For example, while system **900** displays four slave images, system **901** may display six slave images, eight slave images, etc. (not illustrated). Where subsystems display different numbers of slave images, in at least some embodiments, it is contemplated that panel icons corresponding to commonly displayed images will be visually distinguished via the master presentation unit **902** and that panel icons corresponding to uniquely displayed slave images (i.e., images only displayed via one or a sub-set of the subsystems) will be visually distinguished in a different manner. To this end, referring once again to FIGS. **29** and **35**, in the present example it will be assumed that images corresponding to panel icons **1**, **2**, **3** and **5** are commonly displayed via subsystems like subsystems **900** and **901** while the images corresponding to panel icons **7** and **8** are only displayed via a projector **899** associated with subsystem **901**. Here, the commonly displayed panels are marked with markers of one type (see markers **1082**, **1084**, **1086** and **1088**) while the uniquely displayed panels are marked with a second and different type of marker (see **1090** and **1092**).

Referring once again to FIGS. **33** and **35**, in at least some embodiments, when slave images are displayed, image labels corresponding to the panel icon numbers associated therewith are provided as part of each slave image. For instance, consistent with the markers **1082**, **1084**, **1086** and **1088** in FIG. **35** that mark panels **1**, **2**, **3**, and **5**, the images **1022**, **1024**, **1026** and **1028** in FIG. **33** include number labels **1**, **2**, **3** and **5**, respectively.

To alter the displayed slave images, the presenter or a conference attendee can select one of the markers **1082**, **1084**, **1086** or **1088** and move the marker to another one of the panel icons in section **1056**. Thus, for example, when a

presenter moves marker **1084** from panel icon **2** to panel icon **10**, an image corresponding to panel icon **10** is displayed on presentation space **969** in the location occupied by image **1024** in FIG. **33**. Here, the displayed image would include the label "10" in the upper right-hand corner to indicate which image is currently being displayed.

In addition to the panel icons and the "+" icon **1094**, in at least some embodiments a session icon **1091** is provided in section **1056** which corresponds to all of the images associated with panel icons in section **1056**.

Referring again to FIG. **35**, tool section **1060** includes a save icon **1108**, a settings icon **1110**, and a zoom icon **1106**. In at least some embodiments, images generated via a master unit **902** have to be separately saved. Here, for instance, to save an image currently displayed via master unit **902**, icon **1108** is selectable which, in at least some embodiments, opens up a menu including screen selectable "save", "open", "close" and "print" icons for saving images in a session, opening other images, closing a session without saving, or printing session images, respectively. In other embodiments, when save icon **1108** is selected, all of the images currently corresponding to any of the panel icons in section **1056** are stored as part of a session database such that, when the session database is subsequently accessed, all of the panels are re-presented so that, in effect, the conference can be picked up where it was left off. In still other embodiments session icon **1091** may be selected and dragged to or otherwise associated with icon **1108** to store all session images.

Settings icon **1110** is selectable to access tools for altering settings for a current session such as a time before master unit **902** goes into a hibernation mode, how a mechanical stylus operates (e.g., one or two tap activity, etc.), how a keyboard or mouse input device operates, etc.

Zoom icon **1106**, as the label implies, is useable to change the size of information currently displayed within workspace area **1004**. To this end, icon **1106** includes selectable negative and positive ends and a sliding button indicator. By selecting the negative end of icon **1106**, the size of an image currently displayed in workspace area **1004** is reduced while selecting the positive end increases the size of the displayed image. To this end, referring also to FIG. **37**, an initial image **1156** corresponding to panel icon **3** is shown in a reduced size format within a dashed box **1158** which frees up space **1157** within area **1004** for adding additional information. In FIG. **37**, additional information **1160** has been added via pen tool **1070**. Although not illustrated, where an image is enlarged such that the image is too large to fit in area **1004**, scrolling icons may be provided for left-right and up-down scrolling to access different sections of the image. In other cases, the growth of data within workspace **1004** may be restricted so that the information never extends past the displayed area which renders scroll bars and/or tools unnecessary.

Referring one more time to FIG. **35**, target space **1054** includes an envelope icon **1072**, a printer icon **1076** and a trash can icon **1074**. Envelope icon **1072** corresponds to an e-mail function whereby, when a panel icon in section **1056** is associated with envelope icon **1072**, the image associated with the panel icon is e-mailed to some destination. For instance, in at least some embodiments, a presenter may select panel icon **1** in section **1056** and drag that panel icon to envelope icon **1072** after which the master unit software requests an e-mail address of a person to which the associated image should be e-mailed. In other embodiments, when a panel icon is associated with envelope icon **1072**, the associated image is automatically e-mailed to each registered conference attendee such as, for instance, each attendee associated with one of the sources corresponding to icons in section **1058**. E-mail information may be stored in a separate device such as a room wizard or the like. In still other embodiments, when icon **1072** is selected while an image is displayed in area **1004**, a copy of the image in area **1004** is e-mail to one or more destinations. In some embodiments when session icon **1091** is dragged to or otherwise associated with icon **1072**, copies of all of the images associated with the session are e-mailed to one or more destinations. Other mail routing schemes are contemplated.

Printer icon **1076** corresponds to a printer and, as the label implies, when a panel icon or the session icon **1091** from section **1056** is associated with printer icon **1076**, a hard copy of the image or images corresponding to the panel icon or session icon **1091** is printed. Here, association may take the form of dragging a panel icon to printer icon **1076**.

Trash can icon **1074** is useable to delete or remove panel icons from section **1056**. To this end, when a panel icon from section **1056** is dragged to or otherwise associated with trash can icon **1074**, the panel icon is removed from section **1056**. When a panel icon or an image in area **1004** is associated with icon **1074**, in at least some cases, it is contemplated that a page trashing animation or audio presentation will occur. For instance, when an image is trashed, a large page crumpling animation may be presented via area **1004** and/or audio output that sounds like crumpling paper.

Referring once again to FIG. **32**, in addition to being useable to select on-screen button icons within workspace area **1004**, the pointer tool corresponding to pointer icon **1064** can be used for other purposes. For instance, in at least some inventive embodiments, the pointer tool **1064** can be used to select information within an image in area **1004** to be resized. To this end, in FIG. **32**, a pointer icon **1010** is illustrated that has been used to select a rectilinear space **1008** that includes a portion of the information displayed in area **1004**. The rectilinear space is shown by a dotted line. After space **1008** has been selected, pointer icon **1010** may be used to select a corner of the box about space **1008** and drag that corner outward or inward relative to space **1008** to resize the portion of the image within the box.

As another instance, the pointer icon **1010** may be used to, after a space has been selected within area **1004**, move information within the space to a different location within area **1004**. Thus, for example, while not illustrated, in FIG. **32**, after space **1008** has been selected, icon **1010** may be used to move the information within space **1008** from the upper left-hand corner of area **1004** down to the lower right-hand corner where the information may be dropped.

As yet one other instance, in at least some embodiments, it is contemplated that pointer **1010** may be used to move information from an image displayed via workspace area **1004** to one of the panel icons in tool area **1002** and hence to an image associated with the panel icon. In this regard, referring still to FIG. **32**, after space **1008** has been defined, pointer icon **1010** can be used to move the information in space **1008** up and into an associating position relative to one of the panel icons in area **1002**. Referring also to FIG. **38**, area **1008** is shown as attached to icon **1010** which is moved up to panel icon **6** to move the information in space **1008** to the image associated with panel icon **6**. Referring also to FIG. **39**, after information has been moved to the image associated with panel icon **6**, the next time the image associated with panel icon **6** is displayed via either the master unit **902** or as one of the slave images, the information moved thereto is presented as a visually distinguished part of the image. In FIG. **39**, space **1008** is illustrated in the

upper left-hand corner with a rectilinear dotted line box therearound to visually distinguish the information from the remainder of the image. The pointer icon can be used at this time to move space **1008** to any location within area **1004**. The pointer icon can also be used to click, double click, drag, etc., on a personal computing device "remote view" as they are locally connected. In addition, a separate keyboard can be used to type information into the personal computing device.

Referring once again to FIGS. **30** and **31**, as described above, in at least some embodiments, it is contemplated that the display screen **955** of a master unit **951** may be rotated between portrait and landscape orientations and that, when the display is rotated, several things occur. First, as illustrated, when screen **955** is rotated from the portrait orientation to the landscape orientation, the on-screen icons or tools may be rearranged to best accommodate presentation of information. To this end, referring once again to FIG. **32** and as described above, it has been recognized that, to the extent possible, workspace area **1004** should have dimensions that are similar to the dimensions of a typical flip-chart page irrespective of the master unit display format (i.e., aspect ratio) and orientation. In this regard, a typical flip-chart page will usually have between a 3:2 and a 4:3 format while master unit display screens will typically come in two different formats including either a 4:3 or a 16:9 format. In at least some embodiments, to provide a workspace area **1004** that generally has a 4:3 or 3:2 format, the tool area may be differently oriented when a master display screen is in the portrait and landscape orientations. In this regard, referring also to FIG. **32**, in at least some embodiments, when a 16:9 format master unit screen **955** is in the portrait orientation, the tool area **1002** is presented along the upper edge of screenshots **1000**. In at least some cases, the tool area **1002** will have an 18:5 format (i.e., 18 wide by 5 high) which leaves a 2:3 format workspace **1004**. In this case, in at least some embodiments, because the master image presented has a 2:3 format, each of the displayed slave images may also have a 2:3 format (see generally FIG. **30**).

Referring to FIG. **40**, when a 16:9 format master unit screen is rotated into the landscape orientation, in at least some embodiments, the tool area **1202** is provided along a left-hand edge of a resulting screen shot **1200** with a workspace area **1216** to the right thereof. Here, area **1216** is presented in a 4:3 format with the tool area **1202** presented in a 4:9 format. In FIG. **40**, to accommodate all of the tool icons in area **1202** that were accommodated in area **1002** (see also FIG. **32**), the tool icons are rearranged. Nevertheless, the tools have a similar look and feel to the tools that were provided when the screen was in the portrait orientation and therefore operation thereof should be intuitive. In at least some embodiments when the master unit screen is rotated into the landscape orientation, the slave images are also rotated from portrait into landscape orientation and the sizes of the slave images are increased such that a reduced set of slave images are presented (see and compare FIGS. **33** and **41**). In the example illustrated in FIGS. **33** and **41**, instead of presenting four portrait slave images as in FIG. **33** after rotation into the landscape orientation, only two slave images are presented on space **969** and each of those images is in the landscape orientation. Just as area **1216** in FIG. **40** has a 4:3 format, slave images in FIG. **41** would also have a 4:3 format in this example.

In at least some embodiments, when a master unit screen is rotated between portrait orientation and landscape orientation, tool area/workspace area repositioning as well as slave image rotation is automatic. In other embodiments, however, it is contemplated that a presenter will have to take affirmative action in addition to physical rotation to effect the presentation changes. In this regard, referring again to FIG. **35**, in at least some embodiments, an orientation change button icon **1112** is provided in tool section **1060** for switching between portrait and landscape orientations. Thus, when button **1112** is selected and the information is currently displayed via the master unit screen such that the workspace area is in a portrait orientation, the displayed information is rearranged so that the workspace area is in a landscape orientation and the tool area is repositioned accordingly.

Referring once again to FIG. **40**, modifications to at least some of the tool icons when the master screen is in the landscape orientation are of interest. First, referring also to FIG. **32**, instead of presenting the panel icons labeled **1-12** in a portrait orientation, in FIG. **40**, the panel icons **1-12** are presented in a landscape orientation similar to the orientation of workspace area **1216**. Second, in embodiments where the number of displayed slave images is different when the master screen is in the portrait and landscape orientations, the number of markers on panel icons will be automatically changed to reflect only the displayed images. In this regard, in FIG. **40**, consistent with the example above where the number of slave images displayed is cut from 4 to 2 when a master unit screen is rotated from the portrait orientation to the landscape orientation, only two markers **1204** and **1206** are provided in FIG. **40** that are associated with the panels labeled **1** and **2** and the marker icons that were previously associated with panels **3** and **4** have been removed.

Referring now to FIGS. **42** and **43**, exemplary screenshots **1221** and **1240** are illustrated that correspond to portrait and landscape orientations of a 4:3 format screen. In FIG. **42**, portrait oriented screenshot **1221** includes a relatively thin tool area **1225** that extends along a left edge thereof and a workspace area **1223** to the right of tool area **1225**. The tool area has a 1:12 format while the workspace area **1223** has a 2:3 format. In FIG. **43**, the on-screen tool icons are divided into two separate sub-groups and are arranged in two separate tool areas, a first area **1242** along the left edge of the screenshot **1240** and a second area **1246** along the lower edge of screenshot **1240**. In FIG. **43**, the source icons are provided within second area **1246** and all other tool icons are provided in first area **1242**. The remaining area **1244** forms a workspace area which, in this embodiment, has a 4:3 format. In at lease some embodiments, first tool area **1242** will have a 1:9 format and second area **1246** will have a 16:1 format. Other screenshot formats are contemplated.

Referring now to FIG. **44**, a second exemplary tool area **1300** that is similar to area **1002** shown in FIG. **35** is illustrated. Many of the tool icons shown in tool area **1300** are identical or substantially identical to the tool icons shown in FIG. **35** and operate in a similar fashion and therefore, in the interest of simplifying this explanation, many of the tool icons shown in FIG. **44** will not again be described here in detail. The primary distinction between tool area **1300** and tool area **1002** is the way in which panel icons or session image representations within area **1300** that correspond to images presented via slave presentation spaces or units are visually distinguished from other panel icons or session image representations (i.e., session image representations that are not associated with currently presented slave images). In FIG. **44**, currently presented slave images are identified as **1**; **2**; **3**; **4**; **5**; and **6**; that are presented in slave presentation spaces **1310**, **1312**, **1314**, **1316**, **1318** and **1320**, respectively. In this regard, referring to FIGS. **35** and **44**, while panel icons that are associated with currently

displayed slave images in FIG. **35** are marked via token icons (e.g., **1083**, **1084**, etc.), in tool area **1300**, panel icons associated with currently presented slave images are provided within a slave representation area **1302** that is circumscribed by a field boundary (also labeled **1302**) that forms a box. In the illustrated example, the slave representation area **1302** is provided in the upper left hand corner of the space within tool area **1300** reserved for panel icons.

Referring still to FIG. **44**, slave representation area **1302** is further divided into a plurality of slave representation fields, a separate field for each of the slave image presentation spaces in which slave images can be displayed. For example, where a presentation system includes three projectors and each projector can project two separate images so that the system can project a total of six slave images, the slave representation area **1302** includes six separate slave representation fields. Consistent with this example, in FIG. **44**, six separate slave presentation spaces **1310**, **1312**, **1314**, **1316**, **1318** and **1320** for presenting six slave images **1***i*, **2***i*, **3***i*, **4***i*, **5***i*, and **6***i* for conference attendees to view are illustrated. Here, slave representation area **1302** is divided into first through sixth separate slave representation fields that are aligned in a single row within area **1302** and that are identified by numerals **1301**, **1303**, **1305**, **1307**, **1309** and **1311**, respectively. Additional session image representation fields **1313**, **1315**, **1317**, **1319**, **1321** and **1323** are provide outside slave representation area **1302** for panel icons that are not associated with currently presented slave images. In FIG. **44**, panel icons within slave representation area **1302** are identified by numeral **1**, **2**, **3**, **4**, **5**, and **6** and correspond to currently presented slave images identified by labels **1***i*, **2***i*, **3***i*, **4***i*, **5***i* and **6***i* that are presented within slave presentation spaces **1310**, **1312**, **1314**, **1316**, **1318** and **1320**, respectively.

Several ways to modify which slave images are presented via a conferencing system by manipulating icons within tool area **1300** are contemplated. To this end, referring to FIG. **45**, one way to modify presented slave images is to select one of the panel icons within slave representation area **1302** via a mouse controlled cursor or the like and drag the selected icon or representation to another location outside area **1302**. In FIG. **45**, a dragging action is shown wherein panel icon **4** is dragged from slave representation field **1307** down to a field **1325** located outside area **1302** as indicated by arrow **1340**. When icon **4** is released, the panel icon **4** is positioned within field **1325** adjacent panel icon **12**.

Referring still to FIG. **45**, when panel icon **4** is removed from slave representation area **1302**, field **1307** is empty and, as illustrated, the image **4***i* previously presented within slave presentation space **1316** (compare FIGS. **44** and **45**) is removed leaving space **1316** blank.

Referring once again to FIG. **44**, another way to modify the images currently presented via the slave presentation spaces is to select one of the panel icons within slave representation area **1302** via a mouse controlled pointing icon or the like and drag the selected panel icon to another location within area **1302**. For example, although not illustrated, a pointing icon may be used to select panel icon **4** and drag the selected representation to a location between fields **1301** and **1303**. When the selected panel icon is released between fields **1301** and **1303**, the panel icon **4** is placed within field **1303** and panel icons **2** and **3** are moved one field to the right into fields **1305** and **1307**, respectively. As the panel icons within area **1302** are repositioned in this manner, the images presented with presentation spaces **1312**, **1314** and **1316** are similarly modified such that images **4***i*, **2***i* and **3***i* are presented within presentation spaces **1312**, **1314**, and **1316**.

Referring now to FIG. **46**, another way to modify the currently presented slave images is to move a panel icon from outside representation area **1302** to a location within area **1302**. For example, referring to FIG. **46**, a pointer icon may be used to select panel icon **11** and to drag the selected panel icon to a location within area **1302** between fields **1303** and **1305** as indicated by arrow **1342**. Here, referring also to FIG. **47**, when panel icon **11** is released between fields **1303** and **1305**, panel icon **3** is moved from its location in field **1305** to field **1307** and panel icon **11** is positioned with field **1305**. Reflecting the change, within area **1302**, the presented slave images in slave presentation spaces **13** **14** and **1316** are updated to include images **11***i* and **3***i* (see FIG. **47**). In addition, because panel icon **11** has been moved from field **1321**, panel icons to the right of field **1321** are moved one field to the left as indicated by arrows **1350** and **1352** that show panel icons **12** and **4** moving leftward, respectively. Thus, when a panel icon is moved into representation area **1302** and to a location before an empty field, panel icons within area **1302** to the right of the location to which the panel icon is dragged move one field to the right and the next empty field to the right receives a panel icon.

Referring to FIG. **48**, with a separate panel icon in each of the slave representation fields in area **1302**, when another panel icon is moved to a specific location within area **1302**, panel icons within fields to the right of the specific location within area **1302** move one field to the right and the right most panel icon within area **1302** is moved out of area **1302**. For example, as shown in FIG. **48**, when panel icon **12** is selected from field **1321** and dragged to a location between fields **1301** and **1303** within area **1302**, when panel icon **12** is released, panel icon **2** moves one field to the right, icon **11** moves one field to the right, icon **3** moves one field to the right and so on to clear field **303** for panel icon **12**. This rippling effect of panel icon movement is shown in FIG. **49** by multidirectional arrow **1362**. As shown in FIG. **49**, panel icon **6** which was initially located within field **1311** inside representation areas **1302** is moved to field **1313** outside area **1302**. As seen in FIG. **49**, as the panel icons within fields **1301**, **1303**, **1305**, **1307**, **1309** and **1311** are modified, the images presented within slave presentation spaces **1310**, **1312**, **1314**, **1316**, **1318** and **1320** are similarly modified. Thus, because panel icons **1**, **12**, **2**, **11**, **3** and **5** are shown in fields **1301**, **1303**, **1305**, **1307**, **1309** and **1311**, corresponding images **1***i*, **12***i*, **2***i*, **11***i*, **3***i* and **5***i* are presented within spaces **1310**, **1312**, **1314**, **1316**, **1318** and **1320**, respectively.

In at least some applications it is contemplated that when two presentation systems located in different conferencing spaces are linked to facilitate remote conferencing between two different groups of conference attendees, as described above, one of the systems may support more slave presentation spaces than the other. For example, a first presentation system may include three projectors where each projector is capable of presenting two separate images for a total of six slave images while a second system may include four projectors, each projector capable of displaying two separate slave images for a total of eight slave images. Here, in at least some cases, it is contemplated that panel icons corresponding to slave images that are common to both the first and second systems may be presented within a shared or primary slave representation area while panel icons corresponding to currently presented slave image that are presented by only one of the systems may be shown in a secondary slave representation area. To this end, referring to

FIG. **50**, a secondary slave representation area **1366** is shown adjacent a primary slave representation area **1302** and includes two additional slave representation fields **1368** and **1370** that correspond to seventh and eighth slave presentation spaces **1321***a* **1323***a* of one of the presentation systems. In FIG. **50**, slave presentation spaces **1310**, **1312**, **1314**, **1316**, **1318** and **1320** corresponding to a first presentation system present images **1***i*, **12***i*, **2***i*, **11***i*, **3***i* and **5***i*, respectively, which are associated with panel icons **1**, **12**, **2**, **11**, **3** and **5**, respectively, in slave representation area **1302**. Similarly, images **1***i*, **12***i*, **2***k*, **11***i*, **3***i*, and **5***i* are presented via the second system in slave presentation spaces **1310***a*, **1312***a*, **1314***a*, **1316***a*, **1318***a* and **1320***a*, respectively, while images **6***i* and **7***i* are presented in presentation spaces **1321***a* **1323***a* that correspond to fields **1368** and **1370** in secondary slave representation area **1366**.

In at least some embodiments it is contemplated that, when two presentation systems are linked to facilitate remote conferencing between two groups of conference attendees, upon delinking of the two system, each of the systems will retain copies of session images such that the session may be continued despite termination of the remote link. When the remote link is terminated, where a first system supports fewer slave presentations spaces than a second system, upon delinking, the secondary slave representation area **1366** is removed so that panel icons therein are no longer visually distinguished in the first system. Here, in the case of the second system, the primary slave representation area **1302** is expanded to include panel icons and associated fields corresponding to all of the supported slave presentation spaces. Thus, for instance, where first and second systems are linked and slave representation area **1302** is populated with icons as illustrated in FIG. **50**, upon delinking, the first system generates a tool area **1300** as illustrated in FIG. **49** wherein the representation area **1302** includes six panel icons while the second system generates a tool area **1300** as illustrated in FIG. **51** where the slave representation area **1302***a* includes eight panel icons and eight separate slave representation fields (not labeled).

In at least some embodiments it is contemplated that, when computers or secondary conferencing systems are used to remotely participate in a conference, in at least some cases it would be advantageous to print session images to any printing resources linked to computing devices used to facilitate the conference. For example, where four people participate in a conference via four remotely located laptops and each of the laptops is associated with a specific primary printer located proximate the laptop (e.g., within the same office) at the end of a conference, a conference leader may want to distribute hard copies of session images to each of the remote attendees.

To facilitate remote distribution of hard copies of session images, in at least some inventive embodiments it is contemplated that, when a remotely located device is used to connect to a conference, a server managing the conference will poll the remote device to identify printers associated therewith and will then store network addresses associated with the identified printers for subsequent use. Thereafter, referring to FIG. **52**, any time during a conference or thereafter, a system user may select printer icon **1076** to open a print window **1380**. Exemplary print window **1380** includes a list **1382** of printers associated with devices used to facilitate a conferencing session, a separate selection field **1384** for each one of the associated printers and a print button icon **1386**. Here, to print to a subset of the printers associated with devices used to facilitate the conference, a system user simply selects a subset of the fields **1384** corresponding to the printers targeted for printing in list **1382** and then selects print icon **1386** to send complete copies of the session images to each of the selected printers for printing.

Referring now to FIG. **53**, a method **1390** for identifying printers associated with networking devices when devices are linked to a conference is illustrated. At process block **1392**, a conference is commenced via a master presentation unit. At block **1394**, a conferencing server monitors a network linked to the master presentation unit for requests to connect from remote devices (e.g., laptop computers, desktop computers, secondary master presentation units, etc.). At decision block **1396**, when no request is received to connect, control passes back up to block **1394** where monitoring continues. After a request to connect is received at block **1396**, control passed to block **1398** where the conferencing server polls the connecting device for associated printers. At block **1400**, the conferencing server stores the network addresses in an associated database for the identified printers for subsequent use and control passes back up to block **1394** where the server continues to monitor for requests from additional devices to join the conference.

Referring to FIG. **54**, a method for printing session images to printers associated with devices used to facilitate a conference is illustrated. At block **1404**, the conferencing server monitors for a print command. At block **1406**, where no print command is received control passes back up to block **1404** where monitoring continues. At decision block **1406**, after a print command is received, control passes to block **1408** where the list of printers stored at block **1400** in FIG. **53** is accessed and is provided within a print window (see **1380** in FIG. **52**). At decision block **1410**, the conferencing server monitors to determine when print options have been selected. Until print options are selected, control loops back up to block **1408**. After print options are selected, control passes to block **1412** where the conferencing server prints session images to all of the selected printers after which control passes back up to block **1404** where the server continues to monitor for print commands.

In addition to being able to send session images to all devices linked to a conferencing session for printing purposes, in at least some embodiments it is contemplated that it would be advantageous to be able to quickly and easily distribute electronic copies of session images to both local and remote conference attendees. To this end, in at least some cases it is contemplated that when a person agrees to attend a conference or remotely logs into a conferencing session, some processor associated with a conference may be programmed to request or obtain and store an e-mail address for the attendee. Thereafter, referring now to FIG. **55**, after at least one session image has been generated, when mail icon **1072** is selected, in at least some cases, session images may be distributed electronically to all of the previously stored e-mail addresses associated with a specific session. In other cases, when mail icon **1072** is selected, a mail window (not illustrated) akin to print window **1380** in FIG. **52** may be opened to allow a system user to select a subset of conference attendees to receive electronic versions of the session images.

Referring still again to FIG. **55**, an exemplary system **1420** includes a master presentation unit **1422**, a conferencing server **1432**, a conference room wizard **1434**, a networking server **1430**, a network **1426** to facilitate remote linking and a plurality of remotely located laptops **1428***a*, **1428***b*, **1428***c* and **1428***d*. Master unit **1422** is linked to conferencing server **1432** which is in turn linked to room wizard **1434**. Room wizard **1434** is linked to networking server **1430**

which is connected via network **1426** to remote computers **1428***a* through **1428***d*. Here, in at least some cases, room wizard **1434** is used to set up or schedule a conference for a conferencing room in which master presentation unit **1422** will be used. As conference attendees register via the remote computers (e.g., **1428***a*, **1428***b*, etc.) and network **1426**, room wizard **1434** receives and stores e-mail addresses for each attendee. Thereafter, when session images are to be e-mailed to attendees, master unit **1422** sends the images to room wizard **1434** which in turn distributes the images to the session attendees via the stored e-mail addresses.

Referring now to FIG. **56**, a method **1440** for obtaining e-mail address of conference attendees is illustrated. At block **1442**, a conference initiator uses a remote device such as laptop **1428***a* to link to room wizard **1434** and schedule a conference. As part of the conference scheduling process, in initiator identifies other people that the initiator would like to invite to the conference at block **1444**. At block **1446**, room wizard **1434** identifies and stores e-mail addresses for each of the conference invitees for subsequent use.

Referring to FIG. **57**, a method **1450** for e-mailing session images to conference attendees is illustrated. At process block **1452**, server **1432** monitors for an e-mail command from master unit **1422**. At decision block **1454**, until an e-mail command is received, control passes back up to block **1452**. After an e-mail command is received at block **1454**, control passes to block **1456** where server **1432** sends session images to room wizard **1434**. At block **1458**, room wizard **1434** e-mails copies of the session images to the conference attendees at the stored e-mail addresses.

Here, it should be appreciated that, in at least some cases, it is contemplated that the functions of room wizard **1434** or functions akin thereto may be performed by the conferencing server **1432** so that room wizard **1434** may not be required. To this end, instead of scheduling a conference via a room wizard **1434**, conferences may be scheduled or use of a conferencing system may be scheduled via software operated by conferencing server **1432**.

While most of the systems described above include either separate master and slave presentation units or a single presentation unit that includes multiple presentation spaces including at least one master and several slave presentation spaces where the single unit is stationarily mounted, in at least some case it is contemplated that it may be advantageous to provide a portable presentation system that includes both a master presentation space and one or more slave presentation spaces. To this end, referring to FIG. **58**, an exemplary portable presentation system **1460** is illustrated and includes a single presentation housing structure **1462** mounted at a top end of leg members **1470** and **1472** where casters or wheels collectively identified by numeral **1474** are provided at the bottom ends of leg members **1470** and **1472**. Here, a master presentation space **1464** and two slave presentation spaces **1466** and **1468** are provided in a front surface (not labeled) of housing structure **1462**. In at least some embodiments all of the presentation spaces **1464**, **1466** and **1468** may be provided via a single flat panel monitor screen. In other embodiments, each of the three presentation spaces **1464**, **1466** and **1468** may be provided by a separate electronic flat panel display screen. In still other embodiments, master space **1464** may be provided by an interactive flat panel display screen while spaces **1466** and **1468** are provided by a rear projector unit. In still other cases, all three spaces **1464**, **1466** and **1468** may be provided via a single projector unit mounted within housing structure **1462**. In at least some cases position sensing devices will be provided for sensing the location of a pointing device (e.g., a stylus or a users' finger) within space **1464**.

Referring now to FIG. **59**, a second exemplary portable conferencing system **1480** is illustrated that includes a single housing structure **1482** and that provides a master presentation space **1484** and two slave presentation spaces **1486** and **1488** in a single front surface (not labeled) of the housing structure **1482**. In FIG. **59**, slave presentation spaces **1486** and **1488** are arranged so as to be horizontally longer than they are vertically which is the exact opposite of the system illustrated in FIG. **58**.

In at least some embodiments it is contemplated that any type of pointing device may be used to directly interact with a master presentation unit via contact. For instance, a unit operator may be able to use the tip of her finger to select on-screen icons, to draw within a work space, to erase objects within a work space, to select and drag objects within a work space, etc. or, may be able to use a stylus or pen type device to perform the same functions.

Where a finger or a stylus type device can each be employed, it has been recognized that, in at least some embodiments, operator interaction with a master unit can be enhanced by employing dual sensing technologies and different algorithms depending upon which of a finger and another pointing device are employed to perform interactive functions.

Referring to FIG. **60**, in at least some embodiments, the primary sensor for sensing interactivity with a display surface **1604** of a master presentation unit **1602** will include a laser **1606** or other system that generates a light plane **1610** parallel to and slightly separated from surface **1604** by a gap **1612** (e.g., ⅛ to ¼ inch). In these systems, surface interaction and interaction location are generally determined by sensing light plane **1610** penetration and the location at which the penetration occurs.

While light plane type sensing systems work well, these types of systems have some shortcomings. One primary shortcoming where a light sensor system is exclusively employed is that interactivity is often sensed immediately before and just after contact is made with surface **1604**. In this regard, most users that interact with a display surface prefer for the interactivity to mimic interaction with a conventional writing surface such as a paper flip chart sheet where interaction only occurs during contact with the sheet surface. Because of gap **1612**, a light plane sensing system senses activity whenever plane **1610** is penetrated and irrespective of whether or not simultaneous contact with surface **1604** occurs. Thus, as a fingertip or a stylus tip is moved toward (or away from) surface **1604** to generate a stroke, if the tip moves within plane **1610** prior to and/or after contact with surface **1604**, the stroke will include a front portion and/or a rear portion in addition to the portion that occurs during contact. Hereafter, this non-contact activity will be referred to generally as "non-contact activity" unless indicated otherwise. Usually non-contact activity only occurs over a short duration (e.g., 0.5 to 1.0 seconds).

It has been recognized that while non-contact activity is bothersome in all cases (e.g., words and letters may tend to undesirably run into each other), such activity is particularly bothersome in the case where a stylus/pen type device is used to interact as opposed to a finger tip. In this regard, a finger tip is a relatively blunt instrument when compared to a stylus/pen tip and non-contact activity is therefore less bothersome when a finger tip is employed.

In at least some inventive systems, in addition to a light plane sensing system for sensing penetration location, a secondary sensing system is employed for sensing contact of

a stylus/pen tip with a display surface. To this end, referring again to FIG. **60**, the secondary sensing system includes a stylus/pen device **1620** and a receiver **1608**. Stylus device **1620** includes a tip contact sensor **1622** and an rf or other type transmitter **1624**. Sensor **1622**, as the label implies, senses when the tip of the device **1620** contacts a surface such as, for instance, display surface **1604**. When surface **1604** is contacted, transmitter **1624** transmits an rf or other type signal to receiver indicating that a device other than a finger tip has contacted surface **1604**. In addition, device **1620** may transmit additional information such as the nature of device **1620** (e.g., a pen, eraser, pointing device, etc.) color, swath thickness, etc.

A processor **1630** linked to receiver **1608** and the penetration sensor (not separately labeled) that forms part of the light plane sensing system is programmed to identify both position using the light plane sensing system and contact using signals from receiver **1608**. Thus, according to one inventive method when a finger is employed to interact with surface **1604**, non-contact activity may occur, but when a transmitting stylus type device is employed, non-contact activity can be eliminated.

To distinguish between stylus and finger interactivity, at least some inventive embodiments include a system processor (see **1630** in FIG. **60**) programmed to perform the distinguishing method illustrated in FIG. **61**. Here, it is assumed that the processor **1630** is programmed to operate in either one of two interactive modes including a finger mode and a stylus mode. When in the finger mode, all sensed interactivity with a display surface **1604** causes interactive results. In contrast, during stylus mode operation, only interactive activity that occurs when the stylus transmits a "contact signal" open tip **1622** contacting a surface (e.g., surface **1604**) causes interactive results.

Referring at block **1562**, when the master unit shown in FIG. **60** is initially activated, the master unit processor **1630** sets the operating mode to the finger mode. At block **1564**, a timer T is set equal to zero, flag labeled flag**1** is set equal to zero and a threshold duration T_r is set. For example, to one second.

Referring still to FIGS. **60** and **61**, at block **1566**, processor at block **1568**, where no light plane penetration has occurred, control passes up to block **1566**. After light plane penetration does occur at block **1568**, control passes to block **1570**.

At block **1570**, processor **1630** determines whether or not the currently set mode is the finger mode or the stylus mode. Where the stylus mode is set, control passes from block **1570** to block **1572**. At block **1572**, processor **1630** stores penetration location information. At block **1574**, processor **1630** starts timer T. At block **1578**, processor **1630** determines whether or not a stylus signal has been received from a transmitting stylus like the stylus **1620** illustrated in FIG. **60**. When a transmitted stylus signal is received, control passes to block **1569** where the stored penetration data is deleted. At block **1571**, flag**1** is set equal to one to indicate that, for the current light plane penetration, a stylus signal has been received. At block **1573**, processor **1630** commences drawing a line from the current location after which control passes back up to block **1578**. While a stylus signal continues to be received, control passes from block **1578** down through block **1573** and line drawing continues. At block **1578**, when a stylus user lifts the stylus **1620** so that the tip thereof no longer is in contact with display service **1604**, control passes from decision block **1578** to decision block **1576**. When flag**1** is equal to 1 indicating that a stylus signal was previously received during display surface interaction, control passes from block **1576** to block **1577** where processor **1630** causes the master unit to halt line drawing after which control passes back up to block **1564** where the timer T and flag**1** are reset. After block **1564**, the process described above continues.

Referring still to FIG. **61**, after timer T is started at block **1574** and control passes to block **1578**, if a stylus signal is not received by processor **1630**, control passes to block **1576**. The control passes from block **1574** to block **1578** and then to block **1576**, flag**1** will not equal one because no stylus signal was received corresponding to the current light plane penetration and therefore control will pass from block **1576** to decision block **1565**. At block **1565**, processor **1630** determines whether or not penetration continues. Where penetration ceases, control passes from block **1565** to block **1578** where the stored penetration data is used to draw a line. After block **1578**, control passes back up to block **1562** as illustrated where the finger mode is reset.

Referring yet again to FIG. **61**, where penetration continues at block **1565**, control passes to block **1580**. Timer value T is compared to threshold duration T_r. Here, it has been recognized that whenever a stylus or a finger tip or any other device is used to contact a display surface **1604**, there may be a short period between the time when the tip or device penetrates light plane **1610** and when the tip or device contacts surface **1604**. Threshold duration T_r is set equal to a reasonable time period for passing from the light plane level to the surface contacting level. For example, in some cases, duration T_r may be one second, two seconds, one-half second, etc. When the threshold duration is exceeded, processor **1630** is programmed to perform as if the tip or device that penetrated light plane **1610** is a tip or device other than a transmitting stylus type device and control passes to block **1561**. At block **1561**, processor **1630** sets the mode to the finger mode. At block **1563**, processor **1630** uses the stored data to draw a line penetration location. After block **1563**, control passes to block **1631** in FIG. **61**.

Referring again to FIG. **61**, at block **1570**, when the system is in the finger mode, control passes to block **1579** where commences line drawing at the current light plane penetration location. After block **1579**, control passes to block **1631** where processor **1630** determines whether or not penetration continues. Where penetration ceases, control passes to block **1577** where processor **1630** ceases line drawing after which control passes to block **1564**.

At block **1631**, while penetration continues, control passes to block **1632** where processor **1630** caused the master unit to continue drawing a line at the current penetration location. At block **1634**, processor **1630** determines whether or not a stylus signal has been received. If no stylus signal has been received, processor **1630** continues to operate in finger mode and control passes back up to block **1631** where the process described above is repeated. At block **1634**, if a stylus signal is received, control passes to block **1636** where processor **1630** sets the stylus mode. Processor **1630** erases the line currently being drawn up to the current penetration location after which control passes to block **1571** where flag**1** is again set equal to one to indicate that a stylus signal has been received.

While the stylus/finger mode setting algorithm has been described above in the context of a stylus that continually transmits a signal when the stylus tip contacts the surface of a display, in other embodiments the stylus may transmit pen down and pen up signals when the stylus makes initial contact and when contact ceases, respectively, and the processor may be programmed to recognize the period between down and up signals as a contact period.

According to another inventive aspect, a system that includes a master unit and multiple slave presentation spaces can be used to facilitate unique help functions where help information can be provided simultaneously via a subset of presentation spaces and/or during normal operation of the system to perform interactive tasks. To this end, referring to FIG. **62**, a master unit screen shot **1509** and related first through sixth slave presentation spaces **1522**, **1524**, **1526**, **1528**, **1530** and **1532**, respectively, are illustrated where the master screen shot includes, among other things, a workspace area **1510**, a tool area **1300**, a slave representation area **1302** and a help button **1512**. In at least some inventive embodiments, when help button **1510** is selected, a help window **1516** is opened within workspace area **1510** that presents help topics in some fashion, a "close help" icon **1521** and a close help window icon **1518**. After window **1516** is opened, to close the window, icon **1518** can be selected. When icon **1516** is selected, while window **1516** closes, in at least some embodiments other help information that may have been accessed may remain in some presented format for viewing. In at least some cases, to close all help information and to present information that was presented prior to opening the help window, the close help icon **1521** can be selected.

In FIG. **62**, help topics are shown in a list format **1514** and topics are selectable via a mouse or other controlled pointing icon **1520**. When icon **1520** is positioned over a topic, the topic is highlighted to indicate alignment with the topic. Once a topic is selected, the topic is highlighted in a different fashion to indicate that selection has occurred.

After a topic is selected from list **1514**, in at least some embodiments, a system processor accesses a help database, retrieves help information and presents the help information within workspace area **1510** or within a window that appears over the screen shot **1509**. Here and in other contemplated embodiments, the presented help information may include simple text, hyperlink or other linking text that, when selected, leads to other related information, animation to show activities related to selected topics, etc.

In at least some cases, it is contemplated that a system user may want to simultaneously use a system including a master unit and slave units while viewing or having access to help information. For instance, where a system user is not sure how to move panel icons into and out of the slave representation area **1302** and the resulting effect of movement on the images presented via the slave presentation spaces (e.g., **1522**, **1524**, etc.), it may be advantageous for the user to have access to help information (e.g., text, an animation, etc.) that explains how panel icons can be moved in and out of area **1302** and the resulting effect on slave images while simultaneously being able to perform the panel icon dragging and releasing activity. To facilitate simultaneous access to help information and interactive activity, in at least some embodiments when help information is presented in the master workspace area **1510**, a system user can flip the help information from the master area **1510** to one of the slave presentation spaces **1522**, **1524**, etc., and can then use the master unit to perform some activity while help information is presented in the slave space.

Where help information is presented in a window that lies over a workspace area **1510** instead of directly within a workspace area, the window may be flipped to a slave presentation space in at least some embodiments by selecting the window (i.e., selecting the top bar of the window), dragging the window to a location over one of the panel icons within the slave representation space **1302** and releasing the panel icon. Once the panel icon is released, the help window is moved to the slave presentation space associated with the panel icon and will appear as a window over the image that currently exists within the slave presentation space.

A flipped help window may be associated with the slave presentation space or the image over which the help window was flipped. Where the help window is associated with the slave presentation space to which the window was flipped, as other images are moved about the slave spaces, the help window would not simultaneously be moved. Where the help window is associated with an image over which the window is initially flipped, as the image is moved, the help window would simultaneously move.

The advantage of presenting help information in a window format is that, at least where the help window does not take up an entire slave presentation space, at least a portion of the any underlying image is still visible and hence, when an activity affects the underlying image, at least a portion of the affect can be observed to confirm the effect.

In at least some embodiments where help information is presented directly within workspace area **1510** (as opposed to in an overlying window), when the help information is flipped to a slave presentation space, the help information may either be treated like any other slave image and supplant an existing image or may be treated in an overlaying fashion so that any initial image in the space to which the information is flipped remains associated with the space.

Where the flipped information is treated like any other flipped image, any image presented within a slave presentation space prior to flipping is removed from the space and repositioned according to the image management rules described above. For instance, where an image is initially presented in slave presentation space **1522** when a help information image is dragged to and released to a location over the first panel icon in slave representation space **1302** that is associated with slave presentation space **1522** (see again FIG. **62**), the initial image in space **1522** is moved to space **1524**, any initial image is space **1524** is moved to space **1526** and so on.

Where the flipped image is treated as an overlay, any image presented within a slave presentation space prior to flipping is removed from the space so that the help information can be presented within the space but the removed image is not repositioned in another of the slave presentation spaces and the flipping action does not cause other images presented in the slave presentation spaces to be moved within the spaces. For instance, where an image is initially presented in slave presentation space **1522** when a help information image is dragged to and released to a location over the first panel icon in slave representation space **1302** that is associated with slave presentation space **1522** (see again FIG. **62**), the initial image in space **1522** is removed from space **1522** so that the help information can be presented.

In some embodiments, referring again to FIG. **62**, when a help topic is selected from a help window **1516**, the topic information may initially be presented in a slave presentation space instead of being presented in the master unit workspace area **1510**. Where help information for a specific topic requires more space than the space afforded by a single presentation space, the help information may be presented via multiple slave presentation spaces.

In some embodiments, when a help topic is selected and help information is initially presented within the master unit workspace area **1510**, as additional topics are selected, information related to previous help topics may be displayed via the slave presentation spaces. For instance, where a user

initially selects a first help topic to obtain related information and a help window is opened over workspace area **1510** that includes additional selectable help sub-topics in addition to information related to the first topic, when a second help topic is selected from the additional sub-topics, information related to the first topic may automatically be flipped in a window or other format to the first slave presentation space **1522** and either another window may be opened within workspace area **1510** to present information related to the second topic or the second help topic information may be presented in the initial window. Similarly, when a third help topic is selected from the additional sub-topics, information related to the second topic may automatically be flipped in another window or other format to the second slave presentation space **1524** and either another window may be opened within workspace area **1510** to present information related to the third topic or the third help topic information may be presented in the initial window.

In all cases where help information is presented in slave presentation spaces and/or in windows that are provided over images in slave presentation spaces, the help information can be removed from the presented images by simply turning off the help function. In at least some embodiments the help function can be turned off by simply selecting help icon **1512** in FIG. **62** and then selecting the close help icon **1521**.

In some embodiments when the help function is turned off, the state of the system returns to the state that existed just prior to the help function being turned on. Here, for instance, where six images were presented via slave presentation spaces **1522** through **1532** and one image was displayed via workspace area **1510** prior to initiating the help function, when the help function is turned off, all of the seven originally presented images are again presented.

In other embodiments when the help function is turned off, any changes that occurred to the presented information while the help function was turned on remain. For instance, if three help images are presented during help activities via slave presentation spaces **1522**, **1524** and **1526** where the help information images were treated like normal flipped images (i.e., caused movement of other images among presentation spaces), when the help function is turned off the three spaces **1522**, **1524** and **1526** are left blank.

In at least some embodiments it is contemplated that a help function may be supported by a system wherein a related activity is simulated via the system for a user. For instance, again, where a user seeks help information related to movement of panel icons into and out of a slave representation area **1302** (see again FIG. **47**), to show the activity and the result, a system processor may actually show a dragging and releasing activity via the master unit and the effect of the activity via the slave presentation spaces (i.e., the slave images may be moved or altered accordingly). Thus, for example, the processor may cause the master unit to show a pointing icon move to a panel icon in the tool area **1300** to select one of the panel icons, dragging of the panel icon to another location, releasing of the icon and replacement of the icon while causing the slave presentation unit to alter the displayed slave images accordingly.

In at least some embodiments where help information is presented in windows, it is contemplated that the windows may be presented as small sticky notes where, as new help topics are opened, the new notes are presented via either the master unit or within the slave presentation spaces. Here, the note appearance is an indication to a system user that the information on presented via the notes is not permanent and that the images under the presented information still exist and will be there after the help function is turned off. In at least some cases the sticky notes may only be used for help navigation. For instance, when a help function is initially commenced, general help topics may be presented via a first sticky note. When a sub-topic from the first note is selected, a second note may be presented either via the master or via the slave spaces that includes more specific topics and so on.

According to another inventive aspect, a master unit or other interface device that is used with a master presentation unit may be useable to adjust viewing aspects such as, for instance, brightness, contrast, etc., of the slave presentation units so that each presentation unit projects images that have similar appearances. In this regard, in many cases where a presentation system includes two or more projectors, the projectors will project images that have different brightness levels, color contrasts, etc., because different types of projectors are employed or, where identical projectors are employed, because the usage time of the projectors is substantially different (i.e., as projectors are used, the quality of the projected images is denigrated, projector light brightness is reduced, etc.).

When multiple projectors or display screens that have different image generating sources are used to present information, it is often the case that the different projectors or screens and sources generate images that have disparate qualities. For instance, where first and second instances of a single image are presented via first and second separate projectors in first and second presentation spaces, often because of hardware differences, despite the fact that the images are identical, the images may have very different appearances. While different appearances are acceptable when the first and second presentation spaces are used in different locations (i.e., separate conference rooms), when the two spaces are adjacent, the differences in appearance are noticeable and, in many cases, can be distracting.

One image characteristic that is particularly distracting when two or more images are presented in an adjacent juxtaposition is image brightness. With projectors, image brightness varies appreciably from manufacturer to manufacturer and even among projectors of the same type where one projected is older than the other (i.e., projector brightness often decreases over time and with projector use).

Referring to FIG. **63**, an exemplary system is illustrated wherein projector brightness is adjustable via a master display unit **1700**. In FIG. **63**, three projectors **1708**, **1706** and **1704** are linked to master unit **1700** via a system processor/server **1702** where the first projector **1708** projects two images into presentation spaces **1738** and **1740**, the second projector **1706** projects two images into spaces **1742** and **1744** and the third projector projects two images into spaces **1746** and **1748**. As illustrated, the images in spaces **1738** and **1740** are shown as unfilled to indicate relatively bright images, the images in spaced **1742** and **1744** are shown as left to right upward slanting cross hatched to indicate images that are darker than the images in spaces **1738** and **1740** and the images in spaces **1746** and **1748** are shown as double cross hatched to indicate images that are darker than the images in spaces **1742** and **1744** where image brightness is a function of the specific projectors that generate the images.

In FIG. **63**, it is contemplated that processor **1702** is capable of providing control signals to each of projectors **1708**, **1706** and **1704** to adjust perceived projector brightness. To this end, in the case of many projectors, projector bulb intensity is not adjustable and therefore brightness cannot be adjusted by altering bulb intensity. In these cases, it has been recognized that other projector settings can be

adjusted to modify projected image characteristics in ways such that the perceived brightness of the projected images is modified. For instance, in some cases image colors can be altered to adjust perceived brightness.

Referring still to FIG. **63**, in at least some inventive embodiments a projector adjust icon **1722** (also referred to herein as a "projector icon" **1722**) may be provided in a tool area **1300** of a master unit screen shot where a workspace area **1725** resides below the tool area **1300**. When icon **1722** is selected, a projector control window **1728** is opened in a master unit workspace area **1725** that includes a close icon **1724** that can be used to close window **1728**. In addition to icon **1724**, window **1728** also includes a separate projector icon (three projector icons collectively identified by numeral **1726**) for each of the projectors that are linked to server **1702** and associated sliding bar adjustment tools **1730**, **1732** and **1734**, one for each of the projector icons **1726**. Consistent with the above discussion regarding brightness, a system user can select and drag a sliding bar on any of the adjustment tools **1730**, **1732**, **1734** to adjust perceived brightness of associated projected images up or down. Other projector adjustments (e.g., specific adjustments to the three colors used to generate images—red, green and blue, etc.) are contemplated and could be performed via the master unit **1700**. Where adjustments for specific blue, green and red colors are provided, each of the colors may be separately adjustable where, as adjustments are made, the projectors are controlled so that the projectors provide feedback to the adjusting user.

In at least some embodiments it is contemplated that color correction may be used to correct images generated by any single one of the projectors. To this end, in at least some embodiments an interface may be provided that enables a user to select different portions of a projected image and adjust brightness of the separate portions of the image to compensate for brightness irregularities at the edge or in the middle of the projected image. Here, again, in at least some cases color correction may include separate adjustment of each of the three projector colors red, green and blue.

Referring yet again to FIG. **63**, while a system is described above wherein a master presentation unit is used to adjust perceived projector brightness, in at least some embodiments it is contemplated that other interface devices such as a laptop **1712** linked to processor **1702** may be used to adjust brightness. Here, instead of providing the projector control window **1728** via the master unit, the control window **1728** may be provided via the laptop display or some other linked interface device and the window tools may operate in a similar fashion.

In at least some embodiments it is contemplated that a conferencing system including a master unit and associated slave presentation units may be associated with a specific conference room or may be able to be associated with a specific conference room where the conference room includes other environmental apparatus that can be controlled via a master unit in a fashion similar to the way in which the projector characteristics are controlled.

Referring to FIG. **64**, an exemplary system is illustrated wherein projectors and other environmental apparatus are controllable via a master display unit **1750**. In FIG. **64**, as in FIG. **63**, three projectors **1708**, **1706** and **1704** are linked to master unit **1700** via a system processor/server **1702** where the first projector **1708** projects two images into presentation spaces **1738** and **1740**, the second projector **1706** projects two images into spaces **1742** and **1744** and the third projector is capable of projecting two images into spaces **1746** and **1748**. The other apparatus that are controllable via unit **1750** include but are not limited to conferencing cameras and related display hardware **1780**, audio equipment **1782**, window shades **1784**, lighting **1786**, etc.

In FIG. **63**, each of the environmental apparatus as well as the projectors **1708**, **1706** and **1704** are linked to system processor/server **1702** which is in turn linked to master unit **1750**. The illustrated master unit screen shot includes a tool area **1300** and a workspace area **1766** there below. Within the tool area **1300**, an additional environment icon (i.e., a plant icon) **1754** is provided that is selectable to access room apparatus controls. To this end, when environment icon **1754** is selected, a room control window **1752** is opened within workspace area **1766**.

Exemplary room control window **1752** includes a includes a window close icon **1756** for closing the window as well as apparatus control tools including a close/open icon **1758** for room window shades **1784**, an on/off icon **1760** for conference cameras **1780**, an audio on/off icon for controlling audio equipment **1782**, projector on/off icons **1764**, **1766** and **1768**, for controlling the state of each of projectors **1708**, **1706** and **1704**, respectively, and a sliding light control bar for controlling intensity of room lights **1786**. Each of icons **1758**, **1760**, **1762**, **1764**, **1766**, **1768** and **1770** are toggle type icon that change state (e.g., on to off and vice versa) when selected. As selections are made via window **1752**, the selections are carried out by processor **1702**. After selections have been made, a user can select icon **1756** to close the room control window **1752**.

In the illustrated example in FIG. **64**, while projectors **1708** and **1706** are turned on (see icons **1764** and **1766**, icon **1768** indicates that projector **1704** is turned off. Consistent with the control icon states, each of projectors **1708** and **1706** are shown projecting images while projector **1704** is not projecting an image. Reflecting the states of the projectors, note that the slave representation area **1302** in tool area **1300** only encloses four images corresponding to the four images projected by projectors **1708** and i**1706** instead of enclosing six images as in previously described cases.

It has been recognized that environmental conditions for using a conferencing system like the ones described above will often be similar during different conferencing sessions. To facilitate easy system and conference room use, in some embodiments the master unit **1750** may be programmed to present the environment/room control window **1752** the first time master unit **1750** is activated to obtain user preferences as described above. Thereafter, the specified preferences may be stored for future use so that, subsequently, when the master unit is activated, the environment apparatus are controlled to automatically assume states consistent with the specified preferences. In at least some embodiments, as illustrated in FIG. **63**, to facilitate storage of preferences for future use, room control window **1752** will include an "archive" icon or some other tool akin thereto for indicating that specified preferences should be stored. After preferences have been stored, the next time the master unit is activated, the apparatus are automatically controlled to assume the preferenced states.

At any time after a master unit is activated, a unit user can access the room control window by selecting environment icon **1754** to change current apparatus states. After one or more apparatus states have been altered, the states can either be archived as preferences by selecting archive icon **1774** or they can be used for the current session only by selecting the close icon **1756**, after which the specified changed apparatus states will be maintained during the current session but will

not be archived for future sessions (i.e., the previously specified preferences will be maintained until new preferences are archived).

In at least some embodiments the room control window may be provided via an Active-X plug in that enables control of an existing room control system.

In the case of the multiple display units shown in FIGS. **58** and **59**, in at least some embodiments the presentation spaces may be mechanically or electronically rotatable so that the presentation spaces can assume either vertical or horizontal orientations. Thus, for instance, in FIG. **58** where slave displays **1466** and **1468** are shown vertically oriented, in some embodiments displays **1466** and **1468** may be mounted mechanically to facilitate rotation into horizontal orientations like the orientations of the slave displays **1486** and **1488** in FIG. **59**. In other cases rotation may be electronic. Similarly, in at least some embodiments the location of the master unit and the slave presentation spaces may be modifiable either mechanically or electronically so that the master unit may be placed on either the right or the left hand side of the unit.

Referring again to FIG. **55**, in some embodiments server **1432** may be programmed to monitor system use and remote connection to the master unit **1422** and to periodically transmit usage information via a network to another server that tracks system and remote connection for billing purposes.

According to another aspect of at least some exemplary systems, where multiple conference attendees are located at different locations and where a system can be controlled by more than one attendee, it is contemplated that when a specific attendee performs some activity that alters a displayed image or that interacts with the master presentation unit, an icon corresponding to the attendee may be highlighted to indicate who has control of the system and who is making the change. To this end, referring to FIG. **65** an exemplary master display screen shot **1800** akin to the screen shot described above with respect to FIG. **38** is shown. In FIG. **65** icons **1805** associated with each remote conference attendee are provided in tool area **1002** including one icon **1806** associated with a specific remote user. When the user associated with icon **1806** uses a remote computer to control a pen type cursor **1802** to draw an oval around the words "SC DEALER DEVELOPMENT" as indicated at **1804**, in at least some cases, as the oval is being drawn, the icon **1806** may be visually distinguished (e.g., turned yellow, blinked on and off, etc.). Here, when the user stops drawing oval **1804**, if the user ceases making some other modification in workspace **1004**, the icon **1806** may no longer be visually distinguished.

In another case, when a user uses the remote device associated with icon **1806** to begin to draw oval **1804**, icon **1806** may be visually distinguished and may remain visually distinguished until another user performs some image altering activity via another interface device (e.g., a master unit or another remote computer). For instance, if the remote associated with icon **1806** is used to draw oval **1804** and no other remote device is used to alter the master unit image or to interact with the master to perform some other function, in this case, icon **1806** remains visually distinguished for the entire ten minute period. Here, the distinguished icon indicates the last user or remote device used to alter the mast space image or to interact with the master unit.

In still other cases where a specific user is associated with each remote device, when a remote user is altering an image displayed in master space **1004**, a user identifier **1807** may be provided in tool space **1002** that indicates the current user by providing a user ID (e.g. a user name like "John Smith" as illustrated, a user's initials, etc.) or a similar user identifier box may follow a pen or cursor icon about on a display to indicate who is controlling the cursor at any time.

In still some other cases it is contemplated that a feature may be turned on whereby, when a stroke or other image object on an image is selected (e.g., via hovering an icon over the stroke/object or via clicking on the stroke/object), the identity of the person that added the stroke or object to the image may be indicated. Here, the identity may be indicated in any of several ways including highlighting the remote icon (e.g., one of icons **1805** in FIG. **65**) that is associated with the remote computer that was used to make the stroke or add the object, by providing a user identifier akin to field **1807** in FIG. **66**), by providing a field or box akin to field **1807** adjacent a pointing icon used to select the stroke or object, by providing a field adjacent the stroke or object (see **1869** in FIG. **66**), etc. Other ways to associate a stroke or object with an author/editor are contemplated.

In some cases a feature may be provided such that when the feature is turned on the authors of all of the information on an image may be provided. For instance, referring to FIG. **66**, when this feature is turned on fields **1869**, **1871**, **1873** and **1875** may be provided adjacent each object that forms an image where the editors that added the objects are identified in the fields. Here, in at least some cases, in addition to providing the editor fields, the objects may be color coded by editor so that all of the objects added by one editor are presented in a first color, all of the objects added by a second editor are presented in a second color and so on.

In yet one other case it is contemplated that as a specific user alters a master workspace image in space **1004**, all of the alterations made by the specific user that occurred after some other user most recently made a change to the image would be highlighted or otherwise visually distinguished to indicate changes that are related to each other by the identity of the remote device used to make the changes. For instance, in FIG. **65**, assume that after some other user alters the displayed image, the user associated with icon **1806** creates oval **1804** and places the text that appears below oval **1804** in the master workspace **1004**. Here, while other text may appear in black or in the colors selected by users when the text was added to the image, oval **1804** and text added by the user associated with icon **1804** may appear highlighted in yellow and other added text and graphics may appear highlighted in yellow until some other attendee uses another device to make a change to the displayed image. When another remote device is used to make a change to the displayed image, the previously yellow highlighted changes made by the user using the remote associated with icon **1806** would be un-highlighted and the new changes by the other attendee would now be shown in some visually distinguishing fashion. Here, in addition to showing a string of changes by a most recent image editor in a visually distinguished fashion, the remote used to edit may also be indicated in one of the ways described above (e.g., highlighting an associated one of icons **1805**, providing an identifying field **1807**, etc.).

In some cases is it contemplated that a master unit may have a mode wherein changes that are made using specific remote devices and the master unit may be visually distinguished from each other. For instance, in some cases each remote device that links to a conference may be assigned a specific color and any image changes made using the remote device may show up in an image in the color associated with the device. To this end, referring to FIG. **66**, a screen shot **1820** of a master unit is shown that is similar to the screen shot shown in FIG. **65** which includes a tool space **1002** and

a workspace **1004** in which an image is provided. Here, each of remote icons **1826**, **1830**, **1832** and **1834** is highlighted differently. For instance, while icon **1826** may have a blue hue to it, icon **1830** may have a red hue, icon **1832** may have a green hue and so on. When the user associated with remote icon **1826** makes a change to the image illustrated in workspace **1004**, the change would be shown in the color associated with the specific remote icon, in this case, in blue. Similarly, changes caused using the device associated with icon **1830** would be shown in red. In at least some cases it is contemplated that this color coding feature could be turned on and off. For instance, when the color coding feature is off, all image objects would be shown in whatever colors were chosen by the editors that made the changes. Then, when the color coding feature is on, all of the image objects would be shown in the colors associated with the specific remote device icons.

In some embodiments it is contemplated that all changes made by a specific conference attendee on all displayed and thumbnail images or just on the master unit image could be highlighted or otherwise visually distinguished from other image features. Here, for instance, a drop down menu (not illustrated) may be associated with each of the remote user icons **1805** that includes options to "Distinguish Master Image Changes" and "Distinguish All Image Changes". Here, where the "Distinguish Master Image Changes" option is selected for a specific remote device icon, the changes made to the master image using the associated remote device would be highlighted or otherwise visually distinguished. Similarly, where the "Distinguish All Image Changes" option is selected for a specific remote device icon, the changes made to all of the displayed and thumbnail image using the associated remote device would be highlighted or otherwise visually distinguished.

According to another aspect, in at least some embodiments it is contemplated that any device used to electronically link to a system conference may be used to load documents up to the conference through a print type process. To this end, referring to FIG. **67**, a tool space **1850** akin to the space described with respect to FIG. **44** is shown which includes a slave representation area **1852** and a plurality of remote user icons including one remote user icon **1854**. As shown in FIG. **67**, initially no images are shown in slave representation area **1852**. If the attendee associated with remote icon **1854** wants to load an eight page document from some other application such as MS Word™, the attendee can select a print command and can then select the conferencing system including the master unit or easel as the target to which the image should be printed. After the selections above, a version of the eight page document can be generated within the remote computer and presented on the remote computer via windows associated with the conferencing system. In addition, a version of the eight page document can be transmitted to the master unit or easel and used to populate the six slave representation fields **1860**, **1862**, **1864**, **1866**, **1868** and **1870** in space **1852** as well as two session image fields **1874** and **1876** as seen in FIG. **68**. The images would also be presented via the master unit workspace **1004** as well as via the slave presentation spaces for viewing. Thereafter, any of the image changing and session image rearranging processes described above may be performed on the images displayed.

In the above example, if another attendee associated with icon **1908** subsequently wants to upload two additional images and the second image in field **1862** is currently displayed on the master unit as indicated by the highlighting in FIG. **68**, when the two page document is printed to the conferencing system, versions of the two new images are generated that cause the previous images to ripple from space **1862** onward to make room for the two new images. The results of this rippling activity are shown in FIG. **69** where new images **9** and **10** occupy spaces **1862** and **1864**, image **2** that was initially in space **1862** ripples to space **1866** and images **7** and **8** are moved to additional session image spaces **1900** and **1902**. This printing activity enables any remote device to be used to publish documents to the conferencing system for sharing with other remote devices in a simple fashion.

In yet some other embodiments it is contemplated that projector systems similar to the systems described above with respect to FIGS. **58** and **59** may be designed into furniture that has a conventional appearance where the furniture does not include a slave display space (e.g., the furniture includes no screen) but rather uses a flat substantially vertical surface provided by some other structure as a projection surface. To this end, an exemplary system **1940** is shown in FIGS. **70-72** where two projector assemblies **1954** and **1956** are included in a credenza shelving assembly **1942**. In this embodiment, credenza **1940** includes a rectilinear wall structure **1942** that forms an internal cavity **50** for receiving at least a subset of system components, a plurality of doors, two collectively identified by numeral **1944**, internal wall and shelf structure **1952** and a glass top member **1946**. Projectors **1954** and **1956** are arranged on a top shelf just below the glass top.

Each projector **1954** and **1956** has a similar design and operates in a similar fashion and therefore, in the interest of simplifying this explanation, only projector **1956** is described here in any detail. Referring to FIG. **72**, projector **1956** includes a housing (not separately labeled) that includes a top wall window **1955**, a projector unit **1970** and a mirror **1972**. Projector unit **1970** and mirror **1972** are arranged in the housing so that images projected by unit **1970** reflects off mirror **1972** and upward through window **1955** and generally behind credenza **1940** (i.e., to a side of the credenza opposite the side that doors **1944** face and to the rear of a rear edge of the top member **1946** and generally vertically upward there from into a space **1851**). Here, because the top member **1946** is glass, the images projected upward from projectors **1956** and **1956** pass through the top member. When a rear surface of credenza **1940** opposite doors **1944** is generally against a flat wall, projected images appear on the wall surface. Here, it is contemplated that the projectors in credenza **1944** would only be used in at least some applications to provide slave images and that a master presentation unit akin to those described above would be used along with the credenza assembly **1940** to facilitate the methods described above. As shown in FIG. **72**, in at least some cases it is contemplated that casters or wheels may be provided on the bottom of the credenza **1942** so that the credenza and components located therein could be moved from one location to other locations for use. In at least some cases a printer **1943** and other system components (e.g., a master unit server or the like (not labeled) may be provided in space **1950**.

In at least some cases the glass top **1946** may comprise a polymer dispersed liquid crystal (PDLC) window or member that can be controlled to be either opaque or transparent. PDLCs operate on the principle of electrically controlled light scattering. They consist of liquid crystal droplets surrounded by a polymer mixture sandwiched between two pieces of conducting glass. When no electricity is applied the liquid crystal droplets are randomly oriented, creating an opaque state. When electricity is applied the liquid crystals

align parallel to the electric field and light passes through the member creating a transparent state. Here, then, when the projectors are not used to generate images, the glass top **1946** may be deactivated so that the top member is opaque and the projectors and other components inside the space **1950** are hidden. When the projectors are to be used electricity can be applied to the glass thereby causing the glass to become transparent so that projected images can pass there through. In this regard, a power transformer and a control switch are shown as **1841** in FIG. **72**. In at least some cases the opacity controlling switch would be linked in some fashion to the master unit for control when slave images are required. While the opacity controlled glass is described herein as a PDLC type glass, it should be appreciated that any type of electronically controlled glass assembly that has variable opacity may be employed. Hereinafter, glass that has controllable opacity will generally be referred to as opacity controllable glass unless indicated otherwise. In addition, other furniture types are contemplated such as desks, tables, shelved, etc., that include controllable opacity glass for hiding and revealing projectors.

According to still one other aspect, it is contemplated that an automatic scaling feature may be included as part of the master unit interface system wherein, as activities are performed that increase the size of an image beyond a size that will fit in an image space, the image size is automatically reduced to allow for additional application of information at the peripheral edges of the image.

To this end, referring to FIG. **73**, an exemplary master unit screen shot **2000** is shown that includes a workspace **1004** in which a master unit image is displayed. Here, an invisible border or frame space along the edge of the workspace **1004** is shown by a dashed line **2002**. For instance, the frame space may include the two inch space along each of the four sides of a displayed image. When the displayed image is altered such that altering activity causes information to be added to the frame space, the image may be shrunk so that the alterations can be shown. For example, in FIG. **73**, a pen icon **2004** is shown where a curve **2006** that is made on the master image extents into frame space indicated by line **2002** at a lower edge of the displayed image. Referring to FIG. **74**, when the curve enters the frame space, the displayed image including the curve **2006***a* being added is shrunk and moved and the pen icon **2004** is also moved along with the curve **2006***a*.

In some cases, as shown in FIG. **74**, the shrunken image is moved to the center of the workspace **1004** so that information can be added around all four sides of the shrunken image. In other cases, although not illustrated, the shrunken image may be moved to some other location within workspace **1004** such as the upper left hand corner or the top center of the space. In some cases the shrunken image may be moved to the location within workspace **1004** that is most distant from the location at which an image altering activity entered the frame space **2002**. For instance, referring again to FIG. **73** where curve **2006** entered space at the lower edge of workspace **1004**, here, the shrunken image would be moved to be adjacent the top center edge of workspace **1004**. Similarly, if a curve were made that entered space **2002** along the right hand edge of workspace **1004**, the shrunken image may be moved to be relocated along the left center edge of workspace **1004**.

In at least some cases a dynamic resizing may occur. For instance, where an image is initial shrunk by 30% when space **2002** is required by image altering activity, if the altering activity only slightly enters the space **2002** and thereafter changes to the displayed image occur within the bounds of the smaller image space, as subsequent image changes are being made, the image may be rescaled up to a larger image size (e.g., only 10% smaller than the original image size instead of 30% smaller) so that the largest image possible to accommodate an entire image can be provided automatically. In this case, the rescaling of the image may be performed in between changes to the image so that the rescaling does not adversely affect a system user's interaction with the image. Thus, for instance, after an initial downsizing by 30% when an image altering activity extends out of the original image space by a small amount, if subsequent changes to the image over the next fifteen seconds are within a the confines of the original image plus the small extension outside the original confines, when a break in image modifying activity occurs, the image may be resized up by 20% so that the largest possible image is provided automatically.

Moreover, in at least some cases, reduction of image size may not occur immediately when activity enters the boundary space but may occur when a current activity ceases so that the shrinking activity does not result in discontinuous activity. For instance, referring again to FIG. **73**, if a curve passes through boundary **2002** and into the frame space, the resizing may only occur after a stylus used to form the curve is lifted up. Here, in at least some cases, the desired curve may be completed within the frame space or the curve may continue back into the space within the frame boundary **2002** where the curve is completed. Once the stylus is lifted indicating the end to a current activity, the resizing may occur.

When a pen icon is used to alter an image and altering activity extends into the frame space **2002**, immediate image repositioning may cause the immediate location of the pen icon to be misaligned with the activity that was being performed. For instance, referring again to FIG. **745**, when the shrunken image **2008** is repositioned, while a user may be pointing a pen icon controlling stylus at location **2009**, the curve **2006***a* would be moved up to the illustrated location so that a mis-registration occurs. Here, to continue the curve, the user has to realign the icon controlling stylus with the tip of icon **2004**. In at least some cases it is contemplated that realignment with the tip of icon **2004** and hence with the end of curve **2006***a* may not be easy to perform given stylus position sensing capabilities of some master units. In at least some embodiments a realignment feature is contemplated wherein the master unit helps realign by slightly shifting a shrunken image when a realigning activity is attempted.

To this end, referring to FIG. **75**, a shrunken image **2012** is illustrated that is consistent with the discussion above regarding FIGS. **73** and **74**. Here, after the shrunken image is repositioned (e.g., in the center of the workspace **1004**—see again FIG. **74**), it is assumed that a system user repositions a pen icon controlling stylus so that icon **2004** is located as shown with tip end **2016** near but separated (e.g., 2 inches) from the location of end **2014** of shrunken curve **2006***a*. When the master unit senses the new location of icon **2004** and that the tip **2016** is located near end **2014**, the unit may be programmed to assume that the user is attempting to realign the pen tip **2014** with the end **2014** of curve **2006***a*. To help realign, as shown by dotted lines, two of which are collectively identified by numeral **2018**, the shrunken image **2012** may be shifted in its entirety so that curve end **2014** is located at the location of tip **2016** as illustrated in FIG. **2016** after which the user can proceed to complete curve **2006***a* as desired.

According to one other aspect, in at least some cases it is contemplated that a sticky notes feature may be included wherein conference attendees can add small proverbial "sticky notes" to session images that stay with images unless deleted or moved to other images. To this end, referring to FIG. **65**, one additional icon **1809** in tool area **1002** is labeled "Note" which can be selected to add a note to an image currently displayed in the master unit workspace **1004**. When icon **1809** is selected, a note image is opened up **1803** on top of the currently displayed image in workspace **1004**. The note **1803** can be moved around in workspace **1004** by selecting the note and dragging the note around the displayed image. Note **1803** can be closed by simply selecting a delete button **1813** that is associated with the note. Once note **1803** is opened and if the note is not deleted or moved to another image, the note remains associated with the image. Note **1803** can be moved to another image by selecting the note with a pointer icon and dragging the note like an object to a thumbnail of the other image located in tool area **1002**.

In at least some cases it is contemplated that a tool may be provided whereby all notes associated with session images can be viewed on a summary page and that images associated with the notes could then be accessed via the master unit by selecting associated notes. To this end, referring still to FIG. **65**, a "Notes Summary" icon **1811** is provided in tool area **1002** that, when selected, may cause a notes summary screen shot **2100** to be illustrated as in FIG. **77**. In FIG. **77**, a plurality of notes that are associated with a current session image set are shown in workspace **1004** including notes **1803**, **1817**, **1819**, etc. When a note is selected (e.g., a double tap via a pointing stylus device), in at least some embodiments an image associated with the selected note is provided in space **1002**. As shown in FIG. **77**, when a notes screen shot is provided in space **1004**, a "Close Notes Summary" icon **1821** is provided in tool area **1002** that can be selected to close the notes screen shot and replace a previously displayed image in workspace **1004**. In at least some embodiments, although not illustrated, it is contemplated that date, time and author information associated with notes will be stored in a database so that notes corresponding to specific dates and times and/or specific authors can be accessed in a notes summary screen shot akin to image **2100** in FIG. **77**. To this end, for instance, in one case a pull down menu may be associated with each of the remote device icons **1805** in tool area **1002** which includes a notes option so that author specific notes can be accessed. In another case a pull down menu may be associated with "Notes Summary" icon **1811** that can be selected so that a range of dates/times can be specified over which notes should be accessed in a summary format.

According to one other aspect, in at least some cases it is contemplated that pre-canned session templates may be stored in a system database that can be accessed at the beginning of a session to place some structure on session images. For instance, in at least some cases a session template may include a single page that includes a company logo. Here, where a template is a single page, when the template is used, the template may be provided each time a new image is generated so that all of the images in a session set include the logo or whatever else is included on the template. Thereafter the images may be altered in any of the ways described above. In other cases a template may include a plurality of pages (e.g., initial images) that are provided as the first or last pages in a session image set when a session is initiated. For instance, a company may want to enforce system rules wherein the first three pages of each session image set include standard session information such as a session title, a list of participants, session time and date information, participant time and date information, topics discussed, etc. Here, whenever a new session is started, an instance of a new session template may be opened that includes the three first pages and that either includes information gleaned by the master unit or that requires information to be added to the template by a user. Additional images generated during a session would initially be blank in this multiple page template example. In some cases it is contemplated that a large number of single and multi-page templates may be supported by the system so that a user can select any of the different template types. Other template types are contemplated. In at least some cases it may be that the initial or final template image order cannot be altered so that the location of the session information within a set of session images cannot be modified.

While the system described above is particularly useful when used to link several persons together during a conferencing session, in at least some cases session images may be accessed, viewed and/or edited offline and then restored for subsequent on line access. To this end, in at least some cases it is contemplated that a remote device user may log onto the server associated with a master unit, download a session including a plurality of images and then disconnect from the master unit server. Thereafter, the remote device user may be able to edit the session images in any of the ways described above using the remote device. After editing, the remote user can then re-access the master unit server and upload the edited session images for subsequent access during a conferencing session or for access by another remote device user for independent review and editing.

According to yet another aspect, some systems may include customizable help screens that allow an information technology (IT) department to provide customized help information such as a phone number or an e-mail link for contacting the IT department when help is needed. For instance, whenever the master unit is first activated to start a new session, a help splash screen may be provided via the master workspace that includes the IT department contact information. As another example, in addition to providing topical information to a system user when selected, a help button **1829** (see FIG. **65**) may be selectable to access a customized IT department contact screen shot (not illustrated).

According to still another aspect, some systems may include a system news button **1831** (see FIG. **65**) that is selectable to access downloadable system content (e.g., templates, new software tools for the master unit, etc.) and to provide news about new system features and ways to use the system most efficiently. Here, in at least some cases, it is contemplated that when button **1831** is selected, a list of news topics and perhaps a list of downloadable content would be provided via the master unit that could be selected in any fashion known in the art.

In at lest some applications it is contemplated that the system described above may support a Lightweight Directory Access Protocol (LDAP) (e.g., may be made active directory (AD) aware) so that a system administrator can easily manage who has access to the system applications supported by an entity (e.g., by a company). As with other active directory aware applications, the administrator would be able to grant and take away authorization to access system sessions as well as to open and/or edit session images.

In addition to the systems and components described above, other systems that employ portable projectors and

either a portable easel like the easels described above (see again FIG. **24**) or a portable/mobile podium are contemplated. To this end, referring to FIG. **78**, one exemplary presentation kit system **2202** is shown in a conference space **2200** where the conference space **2200** includes a wall **2206** on which images may be projected and a single entry **2204**. In the illustrated example in FIG. **78**, eight separate presentation spaces identified by numerals **2208**, **2210**, **2212**, **2214**, **2216**, **2218**, **2220** and **2222**, respectively, are illustrated on wall **2206**. Kit system **2202** includes a portable podium assembly **2224** and first, second, third and fourth projector carts identified by numerals **2226**, **2228**, **2230** and **2232**, respectively. Each of the carts **2226**, **2228**, **2230** and **2232** is similarly constructed and operates in a similar fashion and therefore, in the interest of simplifying this explanation, only cart **2226** will be described here in detail.

Referring still to FIG. **78** and also to FIGS. **79**, **80** and **81**, exemplary cart **2226** includes a bottom member (not labeled), first and second lateral wall members **2242** and **2250**, a rear wall member **2234**, first and second door members **2252** and **2254**, a top member **2248**, a shelf member **2256**, a handle **2238**, four wheels collectively identified by a numeral **2236**, a projector **2260**, and in the embodiment shown in FIG. **79**, a power supply **2264** and a wireless transceiver (i.e., a receiver/transmitter) **2240**.

Bottom member **2235** is a rigid rectilinear and substantially horizontal member. Wheels **2236** are mounted to the undersurface of bottom member **2235**, one adjacent each of the four corners of member **2235** so that member **2235** and other cart components secured thereto can be moved about in conference space **2200** and out of space **2200** to other areas (e.g., into other conference spaces, private offices, etc.) for use.

Lateral wall members **2242** and **2250** have similar configurations and function in a similar fashion and therefore only member **2242** (see FIG. **81**) will be described here in detail. Member **2242** is a rigid rectilinear member that extends along one of the straight edges of bottom member **2235** and upward therefrom. Member **2242** forms a plurality of vent slots **2244** proximate a top end thereof. Slots **2244** are horizontal in the illustrated embodiment but may take other forms (e.g., vertical slots, circular openings, etc.) in other embodiments. Lateral member **2242** is rigidly mounted at a lower edge along the edge of member **2235** as illustrated. When members **2242** and **2250** are mounted, they are substantially vertical and are spaced apart along opposite edges of member **2235**.

Referring still to FIGS. **79** through **81**, top member **2248** has a shape and dimension similar to the shape and dimensions of bottom member **2235** and traverses the distance between top edges of the first and second lateral wall members **2242** and **2250**. Top member **2248** is transparent and, to that end, may be formed of a Plexiglas type material or a tempered glass material.

Rear wall member **2234** is a rigid rectilinear member that extends along and from a rear edge of bottom member **2235** up to and along a rear edge of top member **2248** and extends between rear edges of the first and second lateral members **2242** and **2250**, respectively.

Each door member **2252** and **2254** is a rigid rectilinear member having a height dimension similar to that of rear member **2234** and having a width dimension (not labeled) that is about half the width of rear wall member **2234**. Member **2252** is hingedly mounted along a front edge of lateral wall member **2242**. Similarly, door member **2254** is hingedly mounted along a front edge of lateral wall member **2250**.

The bottom wall member **2235**, top wall member **2248**, lateral wall members **2242** and **2250**, rear wall member **2234** and door members **2252** and **2254** together form an internal chamber **2255**. Shelf member **2256** is mounted within chamber **2255** and is substantially horizontal when mounted. Doors **2252** and **2254** can be opened as shown in FIG. **79** or closed as door **2252** is shown in FIG. **80**. Handle **2238** extends upward and rearward from rear wall member **2234** and can be used to push cart assembly **2226** during transport. Wireless transceiver **2240** is mounted to and extends up from top member **2248**.

Referring still to FIG. **79**, projector **2260** is supported on a top surface of shelf member **2256** within chamber **2255** and just below transparent top member **2248**. Projector **2260** is positioned and oriented such that when the projector is turned on, images projected thereby are projected through transparent top member **2248** and toward a presentation space or surface formed by a structure such as wall **2206** that is adjacent the door members **2252** and **2254**. In at least some embodiments each projector is a short throw projector so that when the projector cart is placed adjacent a wall, images can be projected onto the wall for viewing. In the wireless embodiment described here, each of the projectors may include a memory and a projector driver. The memory is capable of storing images to be generated for the projector and the driver is provided to drive the projector to display images. Thus, after an image is transmitted from the podium assembly or some other source to a projector cart, the image can be stored at the cart and displayed independent of the podium and until another image is received to be displayed. In other embodiments the projectors may not include separate memory and drivers and instead, images and video to be projected may be wirelessly transmitted (e.g., at 30 frames a second) from the system server **2286** (see FIG. **82**) to each of the projectors.

Referring still to FIG. **79**, a power supply **2264** (e.g., a battery pack) is provided below projector **2260** for providing power to projector **2260**. Although not shown, where power supply **2264** is a battery pack, the supply may include a cable for linking a power outlet for recharging the battery.

Referring again to FIG. **78** and also to FIG. **82**, exemplary podium assembly **2224** includes a bottom wall member **2272**, first and second lateral wall members **2274** and **2276**, a top work surface member **2229**, a rear wall member (not labeled), a shelf member **2280**, a drawer subassembly **2290**, wheels collectively identified by numeral **2225**, a power supply **2282** (e.g., a rechargeable battery), a speaker **2227**, a printer **2284**, a server **2286**, a DVD player **2288**, a wireless transceiver **2231**, a microphone **2270** and an input/output (I/O) tablet or device **2294**. Bottom member **2272** is a rectilinear rigid and substantially horizontal member that has wheels **2225** mounted to an undersurface thereof such that member **2272** and other podium assembly components can be moved/transported within conference space **2200** and indeed out of space **2200** and to other locations for use.

Lateral members **2274** and **2276** are rigid rectilinear members and extend upward from and along opposite edges of bottom member **2272**. Each lateral wall member **2274** and **2276** forms vent slots **2292** for venting heat generated by electronics (e.g., the server **2286**, the DVD player **2288**, etc.).

Top work surface member **2229** is a rigid rectilinear member that is mounted at the top edges of lateral wall members **2274** and **2276**. In the illustrated embodiment, at least a portion of member **2229** is slanted or angled from a rear edge down to a front edge so that materials placed thereon are supported at a comfortable angle for use by a

podium user. Microphone **2270** is mounted to top member **2229** to pick up speech of a person using podium assembly **2224**.

Rear wall member **2227** is a rigid rectilinear and substantially vertical member that extends from a rear edge of bottom wall member **2272** up to and adjacent a rear edge of top member **2229** and that traverses the distance between the rear edges of the lateral wall members **2274** and **2276**. Thus, rear wall member **2272**, lateral wall members **2274** and **2276** and top wall member **2229** together form an internal podium chamber **2278**.

Shelf member **2280** is mounted within chamber **2278** and forms a substantially horizontal top surface when mounted. Drawer subassembly **2290** is mounted just below top member **2229** within chamber **2278** for sliding movement between a closed position (as illustrated in FIG. **82**) and an open position (not illustrated) wherein an internal space formed by the drawer subassembly **2290** can be accessed. When not in use, I/O tablet **2294** can be placed within drawer subassembly **2290** for storage and/or transport.

Referring still to FIGS. **78** and **82**, the rear wall member forms an opening near a lower end to accommodate speaker **2227** which is mounted therein. When a podium user speaks and the speech is picked up by microphone **2270**, the speech is amplified via the speaker **2227** for an audience to hear. In addition, when software is operated or a DVD or other movie-type presentation occurs that includes sound, the sound therefrom can be amplified for an audience to hear via speaker **2227**.

Referring to FIG. **82**, server **2286** is supported on the top surface (e.g., may be rack mounted) of shelf member **2280** and DVD player **2288** is supported on the top surface of server **2286** just below drawer subassembly **2290**. Here, it is contemplated that server **2286** may include a processor capable of running software to facilitate any of the functions described with respect to other embodiments above.

Referring yet again to FIG. **82**, power supply **2282** and printer **2284** are positioned on a top surface of bottom member **2272**. Supply **2282** may include a battery for providing power to server **2286**, DVD player **2288**, printer **2284**, I/O tablet, etc. where supply **2282** is a battery, the battery may be rechargeable and may include a cable for connecting to a power outlet. Wireless transceiver **2231** is mounted to the top surface of top member **2229** and is capable of transmitting information to and receiving information from the wireless transceivers mounted on each of the carts (e.g., see **2240** in FIG. **81**). I/O tablet **2294** may be hardwired to server **2286** or, in the alternative, may be a wireless tablets capable of communicating with server **2286** via transceiver **2231**.

Referring still to FIG. **82** and also to FIG. **83**, server **2286** is hardwired within the podium cabinet to wireless transceiver **2231**, DVD player **2288**, printer **2284**, power source **2282**, microphone **2270** and speaker **2227**. In addition, server **2286** may be hardwired (or wirelessly connected) to a scanner **2295** (not illustrated in FIG. **82**) housed in the podium cabinet and, in at least some cases, a portable database **2293** also housed in the cabinet. In the illustrated embodiment of FIG. **83** the server **2286** is also hardwired to I/O tablet **2294** although this linkage may be wireless as indicated above. Here, server **2286** transmits image data to the projectors in the portable carts (e.g., **2226**) wirelessly via the transceiver **2231** and the cart mounted receivers (e.g., **2240** in FIG. **79**).

Referring still to FIGS. **82** and **83**, while the illustrated embodiment includes the server, a printer, a DVD player and other components mounted in the podium cabinet, it should be appreciated that those components could be located elsewhere and could be linked either wirelessly via transceiver **2231** or a wireless access card in the I/O tablet **2294** or via a hardware cable. For example, server **2286** could be located within an information technology room of a building that includes conference space **2200** or indeed in some other building. Similarly, while server **2286** may be podium mounted, the database **2293** used thereby may be separate from the podium and linked to either via hardware cables or via transceiver **2231**.

Referring once again to FIG. **78**, to use the kit system **2201**, a user moves the four projector carts **2226**, **2228**, **2230** and **2232** into conference space **2200** and moves podium assembly **2224** into space **2200**, and positions the projector carts in a line proximate wall **2206** as illustrated so that when the projectors project, the projected images are directed at wall **2206**. Next, the user places podium assembly **2224** in an advantageous position with respect to an audience within space **2200**, associates the projectors within the projection carts with the podium which is to operate as a master presentation unit and then starts a collaboration session using the kit system **2202**.

In the illustrated embodiment, it is presumed that each one of the projectors in carts **2226**, **2228**, **2230** and **2232** is configured to project two separate flip chart sized images onto projection or presentation wall **2206**. For example, the projector in cart **2226** projects the images into presentation spaces **2208** and **2210**, while the projector in cart **2228** projects the images into spaces **2212** and **2214**, and so on. Here, images are transferred to the projectors wirelessly via podium transceiver **2231** and the projection cart transceivers (e.g., **2240**).

In at least some embodiments, it is contemplated that the process of associating the master presentation unit (e.g., the podium **2241**) and the projector carts **2226**, **2228**, **2230** and **2232** may be similar to the process described above with respect to FIG. **25** except that there is no need to identify one of the units as a master unit. In the kit system **2202**, podium assembly **2224** is always the master unit. Here, if six projector carts are located within space **2200** and the kit user only wants to use the four projector carts illustrated in FIG. **78**, the user may use the podium (e.g., the I/O tablet **2294**, server **2286** and transceiver **2231**) to poll the projectors in the conference space **2200** and receive a list via the I/O tablet **2294** (see again FIG. **82**). Here, polling to generate the projector inventory list would include transmitting a signal from server **2286** to each projector in space **2200** requesting that the projector respond by transmitting a message that identifies the projector via a projector specific ID code. When the ID codes are received, server **2286** generates the inventory list, provides the list via I/O tablet **2294** and provides on-screen tools to select projectors from the list to be associated with the server **2286** during the session to be facilitated.

In the present example, the user would select the projectors associated with the four carts illustrated in FIG. **78** via the I/O tablet **2294** to associate therewith. After selection of the projectors associated with the four illustrated carts, the server **2286** configures the presentation software to support the four projectors and to allow the I/O tablet user to manipulate images displayed by the four projectors. In this regard, where each projector is to project two separate images as shown in FIG. **78**, a display screen including a tool bar like the one shown in FIG. **50** may be provided that shows eight thumbnail icons within representation area **1302** that correspond to the eight projected images.

In some embodiments where a facility (e.g., conferencing space **2200**) already includes an existing wireless infrastructure including access points or the like, the system **2202** may use the existing wireless infrastructure to facilitate communication and data transfer among the system components.

As another example of how the podium and carts can be associated, the projector cart and podium transceivers (e.g., **2231**; **2240**) may be able to transmit identification information to wireless access points within or proximate space **2200** that can be used in a triangulation process to determine the locations of those resources and more specifically that those resources are located within space **2200**. Once the resources in space **2200** have been identified, the projector inventory list may be provided to an I/O tablet user for selection and association.

Referring to FIGS. **50** and **78**, to minimize confusion during a presentation session and to configure a system that operates in an intuitive fashion, the order of images projected by the kit projectors associated with a podium **2224** should match the order of thumbnail icons in the representation area **1302** provided on the display of the I/O tablet **2294**. Thus, as illustrated in FIGS. **50** and **78**, where the thumbnail icons in area **1302** include, from left to right, thumbnails **1**, **12**, **2**, **11**, **3**, **5**, **6** and **7**, the displayed images should include corresponding images **1***i*, **12***i*, **2***i*, **11***i*, **3***i*, **5***i*, **6***i* and **7***i*. For this reason, it is important that the projector and cart **2226** closest to the podium **2224** in FIG. **78** be associated with the first and second presentation spaces **2208** and **2210** and the first and second thumbnails in area **1302**, that the second closest projector and cart **2228** be associated with the third and fourth presentation spaces **2212**, **2214** and the third and fourth thumbnails in area **1302**, that the third closest projector and cart **2230** be associated with the fifth and sixth presentation spaces **2216** and **2218** and the fifth and sixth thumbnails in area **1302** and that the farthest projector and cart **2232** be associated with the seventh and farthest or eighth presentation spaces and the seventh and eighth thumbnails in area **1302**.

To automatically associate specifically and relatively positioned projectors with specific thumbnail icons within area **1302**, where projectors and the podium **2224** transmit identification codes to access points that are useable to determine projector and podium locations via triangulation or the like, the relative locations of projectors and the podium **2224** in space **2200** can be determined automatically. Once relative locations within the space **2200** are known, server **2286** can automatically associate projectors with thumbnail icons in the representation area **1302**. Here, if the order of projectors/carts were changed for some reason, the new locations could be automatically determined. Moreover, if one of the projectors malfunctioned or was needed at another location during a session, the projector could be removed from the operating list and the server **2286** could reassociate thumbnail icons and projectors as needed. For example, assume the projector associated with third cart **2230** malfunctions half way through a presentation and has to be removed from the operating kit. Here, once cart **2230** is moved out of the line of carts, cart **2232** can be moved over to a location adjacent cart **2228** and an automatic reassociation can occur so that the projector in cart **2232** is associated with the fifth and sixth thumbnail icons in area **1302** (see again FIG. **50**). Because only six images would be displayed via the kit projectors instead of the original eight, the representation area **1302** in FIG. **50** would be reduced to a size including six icons.

One other way to track and generate an inventory list of podium/projectors in space **2200** is to provide ID tags on each resource and provide a sensor system at each entry (e.g., **2204**) into space **2200**. Referring again to FIG. **78**, an exemplary wireless sensor **2201** is provided proximate entry **2204** for sensing resource tags. Although not illustrated, sensor **2201** is linked to a server that tracks resource locations. In at least some embodiments, the tags may be RF ID tags and sensor **2201** may be an RF ID sensor. In this regard, see again FIG. **81** where an exemplary RF ID tag **2281** is shown mounted to the external surface of the side wall **2242** of cart **2226**. Here, when cart **2226** passes through entry **2204**, sensor **2201** collects identification information from tag **2281** and the inventory server adds the projector in cart **2226** to the inventory list for space **2200**. When cart **2226** is removed from space **2200**, the inventory server removes the projector in cart **2226** from the inventory list. Tags **2281** may be passive or active (e.g., able to transmit as in the case of RF ID tags).

In some spaces (e.g., **2206**), because of space layout, it may be that projectors are always to be used to project on a single wall. Here, referring again to FIG. **78**, another inventory type system may provide RF ID tags (e.g., **2297**) or the like on an undersurface of each cart or proximate a lower end of the cart and separate RF ID sensors (e.g., **2299**) may be mounted in the floor proximate the locations at which the projector carts are typically located. In this case, when a cart is located proximate a sensor, the sensor may obtain ID information from the tag and a server linked to the sensors may automatically associate the cart and projector therein with the location within space **2200**.

Referring now to FIG. **84**, an exemplary method **2240** performed using the kit system **2202** described above is illustrated. At block **2442**, the master presentation unit or podium **2224** that includes I/O tablet **2294** is moved into conference space **2200**. At block **2444**, a processor is associated with the master presentation unit. Here, where a server **2286** is mounted within the podium assembly **2224** as shown in FIG. **82**, the server processor is already provided. In other cases where a server is separate from the podium assembly, the step of providing a processor may require linking of the I/O tablet **2294** to the server.

Referring still to FIGS. **78** and **84**, at block **2446**, a plurality of portable projector carts (e.g., **2226**, **2228**, **2230** and **2232**) are moved into conference space **2200**. At block **2448**, some process is performed to associate the podium assembly and server associated therewith with at least two of the portable projectors. Any of the associating processes described above may be used here. At block **2450**, after the podium assembly **2224** and carts are associated, a presentation and conferencing session can commence wherein an image is accessed by the podium user via the display screen on the I/O tablet **2294**. In addition, referring once again to FIG. **50**, a control interface including the illustrated tool bar or another tool bar having similar functionality is provided via the I/O tablet **2294**. At block **2454**, the tablet PC user designates one of the projectors to receive and display the image currently on the table display, the image is transmitted to the designated projector via transceiver **2231** and the transceiver (e.g., **2240**) associated with the designated projector and the designated projector projects the image into the appropriate presentation space (e.g., **2208**, **2210**, etc.). In the wireless case the projectors continue to project an image until another image is received or a command is received from the tablet to remove the image from the presentation space.

Referring now to FIG. **85**, a sub-method **2500** that may be substituted for the associating block **2448** in FIG. **84** is illustrated where, in addition to associating a server with

specific projectors, the relative juxtapositions of the projectors is used to associate the projectors with specific thumbnail icon locations in a thumbnail representation area like area **1302** in FIG. **50**. Referring also to FIG. **84**, after block **2446**, control may pass to block **2502** in FIG. **85** where information regarding the projectors within space **2200** is wirelessly obtained via the cart transceivers (e.g., **2240**) and access points within the space **2200**. At block **2504**, a list of the projectors within space **2200** is provided to the tablet PC **2294** user. At block **2506**, the user makes a selection of the projectors to be used during the session. At block **2508**, after the projectors to be employed have been selected from the list, location information obtained from the access points is used to determine a relative juxtaposition of the selected projectors within space **2200** and, more specifically, to determine which projector is closest to the podium **2224**, which projector is second closest, which is third closest and which projector is farthest away from the podium. At block **2510**, the selected projectors are associated with the presentation server **2286** and each projector is associated with specific thumbnail locations in the representation area **1302** (see again FIG. **50**) of the interface tool bar. After block **2510** control passes back to block **2250** in FIG. **84**.

Referring now to FIG. **86**, a second projector based kit system **2202***a* which is similar to the kit system **2202** shown in FIG. **78** described above is illustrated in conference space **2200**. Kit **2202***a* includes a podium assembly **2224***a*, four projector carts **2226***a*, **2228***a*, **2230***a* and **2232***a* and a hardware network **2310** for linking the server in podium assembly **2224***a* to each of the projector carts **2226***a*, **2228***a*, **2230***a* and **2232***a*. In this regard, the hardwire network **2310** may be embedded in the floor of space **2200** or may be placed under the floor in the case of a raised floor space.

Referring still to FIG. **86**, except for the way in which the server inside podium **2224***a* links with the projectors in the projector carts and the way in which the podium and cart components receive power, podium assembly **2224***a* is similar in construction and operation to podium assembly **2224** described above and the carts illustrated in FIG. **86** are similar to the carts illustrated in FIG. **78** and that are described above.

Referring once again to FIG. **86** and also to FIG. **87**, to facilitate hardwired linkage between podium assembly **2224***a* and each of the carts **2226***a*, **2228***a*, **2230***a* and **2232***a*, podium assembly **2224***a* includes a power/data/video port **2263** mounted within one of the lateral side walls near a bottom edge of that wall and each of the carts includes a power/data/video port (see **2326** in FIG. **87**) mounted in one of the lateral side walls near a lower edge.

Referring still to FIGS. **86** and **87** and now also to FIG. **88**, the network **2310** includes power, data and video cable lines **2390** where each line includes separate data and video cables (e.g., CAT 5) **2392**, **2394**, respectively, that terminate with typical data connectors **2398** and **2400**, respectively, and a power cable **2396** that includes a female power plug **2402**. The terminating end of cable **2390** illustrated in FIG. **88** will be referred to herein as a power/data/video terminator. As shown in FIG. **86**, a separate power/data terminator is provided for each of the podium assembly **2224***a* and the carts **2226***a* through **2232***a* proximate locations at which each of the podium assembly **2224***a* and each of the carts would ideally be used within space **2200** (e.g., proximate wall **2206**). To conceal the terminators when the podium assembly and carts are not being used within space **2200**, as shown in FIG. **86** and also in FIG. **87**, a floor box **2332** may be provided for each termination assembly where the box includes a cover **2338**.

Referring still to FIG. **86**, in this embodiment, after podium assembly **2224***a* and the carts **2226***a* through **2232***a* are moved into space **2200**, the podium assembly **2224***a* and carts are positioned adjacent the floor boxes and are linked as illustrated. Here, once the podium server **2286** is powered, the server **2286** can poll the network to identify the configuration of projectors linked to the network **2310** (i.e., the server can determine which projectors are linked and the positions of the projectors) and association can be performed automatically prior to commencing a presentation.

Referring now to FIGS. **89** and **90**, a third projector based kit system **2202***b* is shown that includes a podium assembly **2224***b* and four projector carts **2226***b*, **2228***b*, **2230** and **2232***b*. Here, the podium assembly and carts are similar to the podium and carts described above with respect to FIGS. **79** through **82**, the primary differences being how the podium and carts are linked for communication and power. In this case, podium assembly **2224***b* includes a power/data/video port **2350** that is similar to the power/data/video port described above with respect to FIG. **87**.

Each of the projector carts is similarly constructed and operates in a similar fashion and therefore, in the interest of simplifying this explanation, only cart **2226***b* will be described here in detail.

Cart **2226***b* includes a cart power/data/video network that includes first and second power/data/video splitters **2356** and **2372**, respectively, and power/data/video cables **2368** that link the splitters **2356** and **2372**. The splitters **2365** and **2372** are mounted in opposite ones of the lateral side wall members of cart **2226***b*. Each of the splitters **2356** and **2372** is similarly constructed and operates in a similar fashion and therefore, in the interest of simplifying this explanation, only splitter **2356** will be described here in detail.

Splitter **2356**, as the label implies, includes a single external power/data/video port arrangement including power/data/video ports **2358** as shown in FIG. **87** that are flush with an external surface of the lateral wall member in which the splitter **2356** is mounted. Inside the cart, splitter **2356** includes first and second power/data/video port arrangements **2360** and **2364**, each of which is linked to port arrangement **2358** so that data, power and video from arrangement **2358** can be provided to each of the split arrangements **2360** and **2364**. The projector in cart **2226***b* may be linked to either of the internal arrangements **2360** or **2364** and the other of the arrangements **2360** or **2364** is linked to a similar power/data/video port arrangement **2361** associated with splitter **2372**.

Referring still to FIGS. **89** and **90**, jumpers or jumper cables are provided that can be used to link adjacent carts or to link the podium assembly **2224***b* to an adjacent cart to provide a power/data/video network between the podium and associated carts. In FIGS. **89** and **90**, one jumper cable **2366** is shown linking the port **2263** of podium assembly **2224***b* to cart **2226***b* via the external arrangement **2358** of splitter **2356**. Similarly, a jumper cable **2380** links second splitter **2372** of cart **2226***b* to the first splitter (not labeled) of adjacent cart **2228***b*, another jumper cable **2382** links splitters in adjacent carts **2228***b* and **2230***b* and one other jumper cable **2384** links splitters in adjacent carts **2230***b* and **2232***b*. The second splitter **2386** of cart **232***b* is not linked to another cart, but could be linked to another cart if a fifth cart were to be added to the kit system **2202***b* or if cart **2232***b* were swapped with one of the other carts illustrated in FIGS. **89** and **90**.

Referring now to FIG. **91**, an exemplary jumper cable assembly **2380** is illustrated which includes power/data/video terminators **2233** and **2235** that are akin to the

terminators described above with respect to FIG. **88**. In addition to the terminators, jumper cable assembly **2380** also includes a braided/twisted cable **2412** that includes mechanical clasps or connectors **2416** and **2416** at opposite ends. Referring once again to FIG. **87**, in this embodiment, an eyelet **2237** is mounted adjacent the external splitter receptacle **2358** on each lateral side wall of each cart. The clasps **2414** and **2416** are designed to lock to the eyelets **2237** adjacent the splitter receptacles so that as one of the carts is moved, another cart connected thereto by the jumper cable assembly **2380** is pulled along by the braided cable **2412** in a train like fashion. The cable **2412** may be shorter than the power/data/video cables so that, as connected carts are moved, the power/data/video linkages are not pulled apart which could damage connectors/plugs.

Referring now to FIG. **92**, one additional exemplary jumper cable assembly **2380***a* is shown. Assembly **2380***a* is similar to the assembly **2380** in FIG. **91**, the primary difference being that the power/data/video terminators at each end of the cable includes only a single power/data/video plug instead of three connectors (e.g., see plugs **2420** and **2422**).

At this point, it should be appreciated that any of the kit systems illustrated in FIGS. **78**, **86** and **89** and described above is particularly useful in that projectors that can be separately used for single projector presentations can be cobbled together relatively quickly and efficiently to form a kit system for displaying multiple images and for manipulating those images in various ways. In addition, it should be appreciated that the kits described above may be used with fewer or greater numbers of projector where larger numbers of projectors result in enhanced presentations.

In addition to using a braided cable or the like to mechanically link adjacent carts together to form a "cart train", other types of mechanical linkages are contemplated. For instance, referring to FIG. **93**, each projector cart may include mechanical clasps such as clasps **2260** and **2262** that cooperate with clasps on adjacent carts to rigidly secure adjacent carts together with very little, if any, space therebetween so that when one cart is moved, the others follow precisely. Other more complex clasping mechanisms are contemplated. Where carts are connected in an immediately adjacent fashion via clasps or the like, power/data/video linkages may be formed via the clasps or other mechanical connectors automatically or other dedicated network forming connectors akin to the jumper cables described above may be employed.

Referring now to FIG. **94**, a subprocess **2456** that may be substituted for the associating block **2448** in FIG. **84** is shown that is useful when hardware communication and power cables are required to link projectors with a presentation server. Referring also to FIG. **84**, after block **2448**, control passes to block **2458** in FIG. **94** where a system user mechanically links the podium to the projectors in one of the fashions described above with respect to either of FIG. **86** or **89**. At block **2460**, the server processor polls the network to identify the number of projectors linked thereto and a logical location of the projectors on the network. At block **2462**, the server processor provides an interface display screen via the tablet PC associated with the podium to enable control of images presented by each of the linked projectors using the I/O tablet. After block **2462**, control passes back to block **2450** in FIG. **84**.

While the invention may be susceptible to various modifications and alternative forms, specific embodiments have been shown by way of example in the drawings and have been described in detail herein. However, it should be understood that the invention is not intended to be limited to the particular forms disclosed. For example, referring again to FIG. **82**, I/O tablet **2294** may be useable in either a portrait or landscape mode similar to the easel display screen described above with support to FIGS. **42** and **43** where the tablet image orientation rotates by 90° between the modes. In some cases a user may need to manually select a mode selection icon (see icon **1112** in FIG. **35**) to change between portrait and landscape modes. In at least some embodiments the tablet **2294** may be mounted for rotation between landscape and portrait orientations and when the tablet **2294** is reoriented, the reorientation may be sensed (e.g., via a mechanical switch) and the image presented may be automatically switched to the appropriate mode as described above with respect to FIGS. **42** and **43**. Referring again to FIG. **78** where each projector projects two landscape images (e.g., images **1***i* and **12***i*), when the table **2294** (see FIG. **82**) is rotated to the landscape orientation in at least some embodiments it is contemplated that the projectors would each switch to projecting a single landscape image in the place of the two portrait images.

While an exemplary system is described above with respect to FIG. **31** and other figures that includes two subsystems **900** and **901** that are linked together, it should be appreciated that, in at least some inventive embodiments, only one of the subsystems may be required. Similarly, while an embodiment is described above that includes one or more personal interface devices **911**, **913**, **195**, etc., that are linked to other system components, in at least some embodiments, interface devices like device **911** may not be linked.

In addition, in at least some embodiments, it is contemplated that a master unit user will be able to select where on the master unit the display screen tool area or areas will be provided. For example, in at least some cases, a master unit user will be able to select a button (not illustrated) near the lower end of master unit display screen causing the tool areas to be reoriented near the bottom of the display screen so that a person in a wheelchair can easily reach the tools.

Moreover, while a system is described above that includes a printer **2284** and that may also include a scanner (see **2295** in FIG. **83**) mounted within a portable podium cabinet (see FIG. **82**), in at least some embodiments a separate portable cart may be provided for the printer and/or the scanner. Here, the printer/scanner cart may be linkable to the other system resources and more specifically to the conferencing server **2286** either wirelessly (i.e., the cart may include a transceiver like transceiver **2240** in FIG. **81**) or via power and data cables (e.g., see FIG. **88**). In addition, or in the case of the projector carts above, the printer/scanner cart may be associable with the conferencing server **2286** in any of the ways described above that is suitable for the type (e.g., wireless or cabled) of network used to link the system resources.

Furthermore, while the mobile carts are described above in the context of systems that include podiums, in some embodiments the carts may be used with portable easel type master presentation units like the unit described above with respect to FIG. **24**. In addition, each cart may also be used independently to facilitate projection functions or indeed without a master unit but with other projector carts to facilitate multiple projector presentations. Thus, a PC or the like may be used with multiple wireless or cable networked carts to facilitate a presentation.

In addition, while data and video may be transferred between resources wirelessly it may be that some systems include cable power connectors for providing power to each projector cart, printer/scanner cart, podium assembly and/or

portable easel as batteries may not be practical given power consumption requirements of conventional equipment.

Thus, in the invention is to cover all modifications, equivalents and alternatives falling within the spirit and scope of the invention as described by the following claims. To apprise the public of the scope of this invention, the following claims are made.

What is claimed is:

1. An assembly for sharing information in a conference space, the assembly comprising:

at least one presentation display assembly including a large presentation surface juxtaposed within the conference space for viewing information by an audience within the conference space;

a processor linked to the large display assembly and programmed to perform the steps of:

dividing the presentation surface into a plurality of adjacent presentation sub-spaces including at least one master presentation sub-space and a plurality of different slave presentation sub-spaces; and

enabling an interface that allows images to be presented via the presentation sub-spaces and that enables moving images among the different presentation sub-spaces, the interface enabling movement from the master presentation sub-space to any one of the slave presentation sub-spaces and from any one of the slave presentation sub-spaces to the master presentation sub-space;

wherein, upon an image being moved from the master presentation sub-space to one of the slave presentation sub-spaces, the master presentation sub-space is left blank to receive another image.

2. The assembly of claim **1** wherein the at least one presentation display assembly that includes the presentation surface includes a single and contiguous large presentation display assembly where the presentation surface includes a signal and large contiguous presentation surface .

3. The assembly of claim **1** wherein the at least one presentation display assembly includes a plurality of presentation display assemblies that together form the presentation surface.

4. The assembly of claim **1** wherein each slave presentation sub-space is indistinguishable from other non-master presentation sub-space portions of the large presentation surface when no image is presented in the slave presentation sub-space.

5. The assembly of claim **1** wherein the presentation sub-spaces have predefined default dimensions and the pre-defined default dimensions are substantially identical.

6. The assembly of claim **5** wherein the master presentation sub-space is located centrally on the large presentation space between the slave presentation sub-spaces.

7. The assembly of claim **1** wherein the interface enables an image to be dragged from the master presentation sub-space to any one of the slave presentation sub-spaces to move the image from the master presentation sub-space to the slave presentation sub-space.

8. The assembly of claim **7** wherein a wireless remote control device can be used to drag an image from one sub-space to another sub-space.

9. The assembly of claim **1** wherein the image presented on the master presentation sub-space is the output of a computer application program and wherein the application program may be run to alter the master presentation sub-space image substantially in real time.

10. The assembly of claim **9** wherein the interface enables control of the application program via interaction with the master presentation sub-space image.

11. The assembly of claim **9** wherein the processor is further programmed to, when an image of an application program is moved from the master presentation sub-space to one of the slave presentation sub-spaces, capture an image of the instantaneous output of the application program and present the captured image via the slave presentation sub-space.

12. The assembly of claim **9** wherein the processor is further programmed to, when an image of an application program is moved from the master presentation sub-space to one of the slave presentation sub-spaces, drive the one of the slave presentation sub-spaces with the output of the application program.

13. The assembly of claim **1** wherein the slave presentation sub-spaces include at least first and second different slave presentation sub-spaces.

14. The assembly of claim **1** for use during a conferencing session to generate a plurality of session images, the processor further programmed to present a tool area including a separate thumbnail icon for each session image on the presentation surface where a thumbnail icon may be selected to present a session image associated therewith in the master presentation sub-space.

15. The assembly of claim **1** wherein the interface enables selection of an area of an image presented on the master presentation sub-space to create an independent sub-image.

16. The assembly of claim **15** wherein the independent sub-image can be moved to another session image to modify the another session image.

17. The assembly of claim **1** wherein the processor is further programmed to enable a user to select an image in the master presentation sub-space, drag the image in the master presentation sub-space to another sub-space on the presentation surface and create a slave presentation sub-space at the location of the another sub-space that includes the dragged image to move the image from the master space to a slave presentation space.

18. The assembly of claim **17** for use with at least first and second computers running first and second application programs to generate program output in the form of images, the processor further programmed to receive the program output from the first and second application programs and present first and second images in separate windows on the master presentation sub-space to form a master sub-space image.

19. A method for sharing information in a conference space, the method comprising the steps of:

providing at least one large presentation display assembly including a large contiguous presentation surface within the conference space for viewing information by an audience within the conference space;

providing a processor linked to the large display assembly and programmed to perform the steps of:

dividing the large presentation surface into a plurality of adjacent presentation sub-spaces including at least one master presentation sub-space and a plurality of different slave presentation sub-spaces; and

enabling an interface that allows images to be presented via the presentation sub-spaces and that enables moving images among the different presentation sub-spaces;

wherein, when an image is moved from the master presentation sub-space to one of the slave presentation sub-spaces, the master presentation sub-space is left blank to receive another image.

20. An assembly for sharing information in a conference space, the assembly comprising:

at least one presentation display assembly including a large presentation surface juxtaposed within the conference space for viewing information by an audience within the conference space includes the presentation surface, wherein the at least one presentation display assembly that includes the presentation surface includes a single and contiguous large presentation display assembly where the presentation surface includes a single and large contiguous presentation surface;

a processor linked to the large display assembly and programmed to perform the steps of:

dividing the presentation surface into a plurality of adjacent presentation sub-spaces including at least one master presentation sub-space and a plurality of different slave presentation sub-spaces; and

enabling an interface that allows images to be presented via the presentation sub-spaces and that enables moving images among the different presentation sub-spaces;

wherein, upon an image being moved from the master presentation sub-space to one of the slave presentation sub-spaces, the master presentation sub-space is left blank to receive another image.

* * * * *